DATED 2014

BRIGHTON & HOVE CITY COUNCIL

and

THE UNIVERSITY OF SUSSEX

and

THE HISTORIC BUILDINGS AND MONUMENTS COMMISSION FOR ENGLAND

LISTED BUILDING HERITAGE PARTNERSHIP AGREEMENT
pursuant to Section 26A Planning (Listed Buildings and Conservation Areas) Act 1990 as amended
relating to
land at the University of Sussex

Brighton & Hove City Council
King's House
Grand Avenue
HOVE
BN3 2SR

CONTENTS

1 Recitals
2 Definitions
3 Legal effect
4 Miscellaneous
5 The Heritage Assets
6 Summary of Significance
7 The Consented Works/Type 2A Works
8 CLP Works/Type 2B Works
9 Other Agreement Particulars

Annexes

Annex A: Site Plan
Annex B: List descriptions
Annex C: Plans of Library, Pevensey 1, Chichester 1, Arts A and B
Annex D: Photogrpahic record of the buildings and Spence furniture audit
Annex E: Specifications Type 2A Works
Annex F: Specifications CLP Works/Type 2B Works
Annex G: Further Guidance on where Listed Building Consent will be required/Type 3 Works
Annex H: Future Projects
Annex I: Statement of Reasons

THE LISTED BUILDING HERITAGE PARTNERSHIP AGREEMENT is made on the XXXXX day of XXXXX 2014

BETWEEN

(1) **BRIGHTON & HOVE CITY COUNCIL** of King's House Grand Avenue Hove BN3 2SR (hereinafter called "the Council") of the first part

(2) **THE UNIVERSITY OF SUSSEX** of University of Sussex of 4th Floor Bramber House Refectory Rd Falmer Brighton BN1 9QU (hereinafter called "the University")

(3) **THE HISTORIC BUILDINGS AND MONUMENTS COMMISSION FOR ENGLAND** of Eastgate Court 195-205 High St Guildford GU1 3EH (hereinafter called "HBMCE")

1. RECITALS

1.1 The Council is the Relevant Local Planning Authority for the purposes of the 1990 Act in respect of the Land

1.2 The Council is the registered proprietor of the freehold interest in the Land registered at HM Land Registry under title number ESX300632.

1.3 The University is the registered proprietor of the leasehold interest in the Land registered at HM Land Registry under title number SX110974.

1.4 HBCME is the statutory advisor to the Government in relation to the historic environment.

1.5 The University Listed Buildings were listed at Grade I and Grade II* in 1993.

1.6 The Council has agreed to enter into this LBHPA and to grant Listed Building Consent for the Consented Works to the University Listed Buildings having reference to the applicable policies that would be considered as part of a Listed Building Consent application and having regard to the provisions of the Council's Policies, Development Plan Documents and all other material planning considerations and considers that the proposals strike an appropriate balance between preserving and enhancing the University Listed Buildings' special architectural and historic interest and allowing the University to cater to modern student needs.

1.7 The parties to this Deed have agreed that Listed Building Consent should be granted in respect of the Consented Works to the University Listed Buildings.

1.8 In accordance with the Regulations the Council has consulted HBCME and has taken into account the representations made in respect of this LBHPA.

1.9 The Council has informally consulted The Twentieth Century Society.

1.10 In accordance with the Regulations the Council has made the details of this LBHPA, the Consented Works and the Statement of Reasons (found at Annex I) available for inspection by the public.

2. DEFINITIONS

2.1 **"the 1990 Act"** means the Planning (Listed Buildings and Conservation Areas) Act 1990 as amended

2.2 **"Arts A and B"** means the Listed Building with listing number LE No. 1381045 shown on the plan at Annex A and as described in Annexes B and C

2.3 **"Annex A"** means Annex A to this LBHPA which contains a site plan, with listed buildings annotated.

2.4 **"Annex B"** means Annex B to this LBHPA which contains the list descriptions for the Listed University Buildings

2.5 **"Annex C"** means Annex C to this LBHPA which contains more detailed plans of the extent of the listings as they refer to Arts A and B, the Chichester 1 Building, the Library and the Pevensey 1 Building.

2.6 **"Annex D"** means Annex D to this LBHPA which provides details of the photographic record of the buildings, along with an audit of fixed Spence furniture taken at time of signature of the LBHPA.

2.7 **"Annex E"** means Annex E to this LBHPA which contains specifications for part of the Consented Works.

2.8 **"Annex F"** means Annex F to this LBHPA which sets out the CLP Works.

2.9 **"Annex G"** means Annex G to this LBHPA which provides further guidance on where Listed Building Consent is required

2.10 **"Annex H"** means Annex H to this LBHPA which lists future projects

2.11 **"Annex I"** means Annex to this LBHPA at which is found the Council's Statement of Reasons

2.12 **"the Attenborough Centre"** means the Listed Building with listing number LE No. 1381046 shown on the plan at Annex A and as described in Annex B and previously known as the Gardner Arts Centre

2.13 **"the Chichester 1 Building"** means the Listed Building with listing number LE No.1381042 shown on the plan at Annex A and as described in Annexes B and C

2.14 **"the CLP Works/Type 2B Works"** means those works set out in Clause 8 and further described in Annex F and which the parties to this Deed agree do not require Listed Building Consent

2.15 **"the Consented Works"** means those works described in Clause 7 also known as 'the Type 2A Works'

2.16 **"Falmer House"** means the Listed Building with listing number LE No. 1381044 shown on the plan at Annex A and as described in Annexes B and C

2.17 **"Future Projects"** means those projects to be carried out at a later date as yet determined and described in Annex H

2.18 **"English Heritage"** means the HBCMCE

2.19 **"the Land"** means the land on which the Listed Buildings are located shown for identification purposes only shaded in red on the Plan in Annex A.

2.20 **"Lawful Development Certificate"** means a certificate granted pursuant to an application made under Section 192 of the Town and Country Planning Act 1990 (as amended)

2.21 **"LBHPA"** means a Listed Building Heritage Partnership Agreement made pursuant to Section 26A and 26B of the 1990 Act

2.22 **"the Library"** means the Listed Building with listing number LE No. 1381047 shown on the plan at Annex A and as described in Annexes B and C

2.23 **"Listed Building"** means a listed building as defined in Section 1(5) of the 1990 Act

2.24 **"Listed Building Consent"** means a consent for works as defined in Section 8(7) of the 1990 Act

2.25 **"the Listed University Buildings"** means Arts A and B, the Attenborough Centre, the Chichester 1 Building, Falmer House, the Library, Meeting House, Pevensey 1 Building and the Shawcross Building

2.26 **"The Listed Building Group Meetings"** mean the bi-annual liaison meetings held between the Partners

2.27 **"Meeting House"** means the Listed Building with listing number LE No. 1381048 shown on the plan at Annex A and as described in Annex B

2.28 **"non-statutory HPA"** means the non-statutory Heritage Partnership Agreement currently used to aid the management of the University's historic estate.

2.29 **"the Partners"** means the University, the Council and HBMCE

2.30 **"the Pevensey 1 and 2 Building"** means the Listed Building with listing number LE No. 1381049 shown on the plan at Annex A and as described in Annexes B and C

2.31 **"the Regulations"** means the Planning (Listed Buildings and Conservation Areas) (Heritage Partnership Agreements) (England) Regulations 2014

2.32 **"the Relevant Local Planning Authority"** means in relation to a listed building, means a local planning authority in whose area the building or any part of the building is situated

2.33 **"the Statement of Reasons"** means the statement of reasons produced by the Relevant Local Planning Authority in accordance with the Regulations

2.34 **"the Shawcross Building"** means the Listed Building with listing number LE No.1381043 shown on the plan at Annex A and as described in Annex B

2.35 **"the Type 1 Works"** are de minimis works

2.36 **"the Type 3 Works"** means those works which require Listed Building Consent, do not form part of the Consented Work and as described in Annex G

3. LEGAL EFFECT

3.1 This Deed is made Pursuant to Section 26A of the 1990 Act, the Regulations, Section 111 of the Local Government Act 1972, Section 2 of the Local Government Act 2000 and all other enabling powers and grants Listed Building Consent in respect of the Consented Works to the University Listed Buildings subject to the conditions set out in Clause 7 below.

3.2 The provisions of this Deed are enforceable by the Council as Relevant Local Planning Authority

4. MISCELLANEOUS

4.1 The parties to this Deed acknowledge and agree that the CLP Works do not require Listed Building Consent. It is further acknowledged that the University will submit an application for a Lawful Development Certificate[s] in respect of the CLP Works which the Council shall determine having regard to this Clause 4.1 of the LBHPA and then be formally incorporated into this document.

4.2 The parties to this Deed acknowledge and agree that the following works fall outside the controls of the LBHPA:

4.2.1 works which can be categorised as de minimis (also known as Type 1 Works) and which are not the subject of this LBHPA or form part of the CLP Works. Listed Building Consent is needed for any works of demolition of a listed building or for its alteration or extension in any manner which would affect its character as a building of special architectural or historic interest[1]. Any works which do not affect the character of the listed building in such a way do not need Listed Building Consent.

4.2.2 the CLP Works (also known as Type 2B Works).

4.2.3 works which require Listed Building Consent and do not fall under the definition of Consented Works, (also known as the Type 3 Works).

4.2.4 Emergency works PROVIDED THAT a list of all emergency works undertaken will be submitted annually to the Council and HBMCE. The parties to this Deed shall take a reasonable view what constitutes such works and the need for them and will discuss whether such works fall outside the LBHPA promptly, if necessary and the University will notify the Council of proposals for urgent works as a matter of urgency.

4.2.5 Future projects.

5 The HERITAGE ASSETS

5.1 This LBHPA relates to the following buildings:

[1] Please note works affecting the interior may affect the special historic or architectural interest of the building, and may therefore require Listed Building Consent

1. Arts A and B
2. the Attenborough Centre
3. the Chichester 1 Building
4. Falmer House
5. Meeting House
6. the Library
7. the Pevensey 1 and 2 Building
8. the Shawcross Building

6. SUMMARY OF SIGNIFICANCE

6.1 Spence's Master Plans at both Sussex and Southampton demonstrate his aptitude for colour, material and the relationship between landscape and building. Each campus is forward looking whilst evoking a sense of tradition. However, it is the sense of completeness and monumentality at Sussex that displays Spence at his absolute best. Spence cited Robert Adam's quadrangle at Edinburgh University as an influence. However the inspiration of Corbusier is evident in both the materials at Maison Jaoul (concrete barrel vaults, brickwork and oak) and the monumentality of Chandigarh and like le Corbusier, Spence was concerned with an interweaving of old themes and new forms of expression.

6.2 That Spence was as preoccupied with the interior of his buildings as with the exterior is shown by his use of chiaroscuro and his exploitation of the natural textures of materials: knapped flint, concrete and brick at Sussex, stone at Coventry and Southampton. His use of light, shadow and procession was heavily influenced by both Lutyens and his childhood experiences in India. This together with his skill at placing buildings within their landscape was Spence's greatest strength. Sussex demonstrates such skills at their best: what held Sussex together and contributed to the sense of completeness sought by Spence, was the 'buildings' distinctive style, and their consistent low massing against the valley sides'.[2]

6.3 Therefore, as the buildings have many design features in common, it is important that these features should be safeguarded as a major contributor to the significance of the buildings. These include the use of a good quality red brick set in a slightly cementitious mortar of a yellowy buff colour; the use of board-marked concrete; segmental arches, particularly in concrete, both externally and internally; the use of exposed brickwork internally; and retention of internal fittings, such as laboratory fittings in science buildings and shelving

[2] University of Sussex, Conservation Plan, prepared by Architects Design Partnership LLP, with Brighton and Hove City Council and English Heritage, January 2006

units in Arts A, crafted in oak to match chairs and tables also designed by Spence.

7 THE CONSENTED WORKS/TYPE 2A WORKS

7.1 Repair to facing concrete (LBHPA2A1)

7.1.1 One of Spence's repeating motifs in Listed University buildings is vertical board marked concrete. Reversibility is not possible with concrete repair materials, due to the destructive nature of the process, so the University has helped to develop, and implemented, two specifications. These are set out at Annex E1.

7.1.2 Repairs to facing concrete on the Listed University Buildings shall be carried out in accordance with the specifications at Annex E1 and subject to the following conditions:

1. The works hereby permitted must be completed before the end of the ninth year of the date of this LBHPA.
2. Before any works are begun written notification of the intended start date of works is to be submitted to the Council.
3. All works are to be the made a subject of a photographic record, details of which will be submitted to the Partners on an annual basis each year by the 31st March.
4. All works will be carried out in accordance with the specifications included at Annex E1.

Reasons for the above mentioned conditions: To ensure that special regard is paid to the interests of the protecting the special character and architectural interest and integrity of the building under Section 16 of the Planning (Listed Buildings & Conservation Areas) Act 1990 and that works are carried out in accordance with the Statement of Reasons required by The Planning (Listed Buildings and Conservation Areas) (Heritage Partnership Agreements) Regulations 2014.

Informative: Any deviation from the methods and materials at Annex E1 will require a standalone application for Listed Building Consent in the usual way.

7.2 Works to library and laboratory fitted furniture (LBHPA2A2)

7.2.1 The Library and science buildings retain some original Spence furniture. The Partners hereby agree that some changes can be effected to these buildings in order that the University is able to upgrade facilities without requiring an application for Listed Building Consent. An audit of surviving Spence furniture has been undertaken to inform this LBHPA, included at Annex D. The consented

works hereby permitted are limited to ensure that wholesale loss of Spence furniture does not occur.

7.2.2 The works hereby consented in respect of the Chichester 1 Building, the Library, the Pevensey 1 and 2 Building and the Shawcross Building are subject to the following conditions:

1. The works hereby permitted must be completed before the end of the ninth year of the date of this LBHPA.
2. Before any works are begun written notification will be provided to the Partners of the following:
   i. The intended start date of the proposed works
   ii. The scope of works proposed
   iii. A record of the items to be removed including survey drawings, indicative sections of furniture (suggested scale 1:5) and a photographic record to be undertaken by a person or body approved by the Council
   iv. A record of furniture to be retained; details of how it will be removed; details of where it will be held during works and; details of where it will be reinstated at the completion of works.
   Nil response by the Council and HBMCE within 21 days will be deemed as authorisation of the works.

Reasons for the above mentioned conditions: To ensure that special regard is paid to the interests of the protecting the special character and architectural interest and integrity of the building under Section 16 of the Planning (Listed Buildings & Conservation Areas) Act 1990 and that works are carried out in accordance with the Statement of Reasons required by The Planning (Listed Buildings and Conservation Areas) (Heritage Partnership Agreements) Regulations 2014.

Informative: Any proposal for wholesale removal of Spence fittings or furniture from the buildings listed above will require a standalone application for Listed Building Consent in the usual way.

7.3 Lecture theatre refurbishment (LBHPA2A3)

7.3.1 The lecture theatres within Arts A, the Chichester 1 Building and the Shawcross Building retain some original Spence furniture i.e. benches, desks, consoles, timber flooring, projector rooms. The Partners have agreed that some changes can be effected to these buildings in order that The University is able to upgrade facilities without requiring an application for Listed Building Consent. An audit of surviving Spence furniture has been undertaken to inform this LBHPA, included at Annex D.

7.3.2 The consented works to Arts A, The Chichester 1 Building and the Shawcross Building hereby permitted are limited to ensure that wholesale loss of Spence furniture does not occur and are subject to the following conditions:

1. The works hereby permitted must be completed before the end of the ninth year of the date of this LBHPA.
2. Before any works are begun written notification will be provided to the Partners of the following:
   i. The intended start date of the proposed works
   ii. The scope of works proposed
   iii. A record of the items to be removed including survey drawings, indicative sections of furniture (suggested scale 1:5) and a photographic record to be undertaken by a person or body approved by the Council
   iv. A record of furniture to be retained; details of how it will be removed; details of where it will be held during works and; details of where it will be reinstated at the completion of works.
   Nil response by the Partners within 21 days will be deemed as authorisation of the works.

Reasons for the above mentioned conditions: To ensure that special regard is paid to the interests of the protecting the special character and architectural interest and integrity of the building under Section 16 of the Planning (Listed Buildings & Conservation Areas) Act 1990 and that works are carried out in accordance with the Statement of Reasons required by The Planning (Listed Buildings and Conservation Areas) (Heritage Partnership Agreements) Regulations 2014.

Informative: Any proposal for wholesale removal of Spence fittings or furniture from the buildings listed above will require a standalone application for Listed Building Consent in the usual way.

7.4 Metal window replacement (LBHA2A4)

7.4.1 Solutions have been agreed by the University, the Council and English Heritage for replacement of windows with energy efficient, double glazed metal frames, replicating as far as possible existing details, including sight lines.

7.4.2 The following conditions shall apply to any proposed replacement of windows affecting Arts A and B, the Chichester 1 Building, Falmer House, the Library, the Pevensey 1 and 2 Building and the Shawcross Building:

1. The works hereby permitted must be completed before the end of the ninth year of the date of this LBHPA.

2. Before any works are begun written notification of the intended start of the works is to be submitted to the City Council.
3. All works are to be the made a subject of a photographic record, details of which will be submitted to the Partners on an annual basis each year by the 31st March.
4. All works are to be executed according to the typical detail as shown on Drawing Nos. 8935G2B/D1, D2, D3, D4, D5, D6, D25, D26, D29/A, D30/A, D31, D54 and D55, included at Annex E2.

Reasons for the above mentioned conditions: To ensure that special regard is paid to the interests of the protecting the special character and architectural interest and integrity of the building under Section 16 of the Planning (Listed Buildings & Conservation Areas) Act 1990 and that works are carried out in accordance with the Statement of Reasons required by The Planning (Listed Buildings and Conservation Areas) (Heritage Partnership Agreements) Regulations 2014.

Informative: The consent hereby granted excludes works to the Meeting House and Attenborough Centre. It also excludes any work to enclose currently open voids across any of the listed buildings on the campus, which will require a standalone application for Listed Building Consent in the usual way.

7.5 Detailing of external handrails (LBHPA2A5)

7.5.1 The installation of handrails to external Spence staircases has been previously accepted in principle by the Council in the interests of improving the accessibility and safety of the campus. The works are considered harmful to identified significance, and therefore an approach has been developed to enable the impact to Spence's monumental staircases to be minimised as far as possible.

7.5.2 The following conditions apply to the Pevensey 1 and 2 Building and the Shawcross Building:

1. The works hereby permitted must be completed before the end of the ninth year of the date of this LBHPA.
2. Before any works are begun written notification of the intended start of the works is to be submitted to the Council.
3. All works are to be executed according to the specification at Annex E3 and details shown on drawing Nos.: GA.D.001, 002, 003 (All Rev A) included at Annex E3.

Reasons for the above mentioned conditions: To ensure that special regard is paid to the interests of the protecting the special character and architectural

interest and integrity of the building under Section 16 of the Planning (Listed Buildings & Conservation Areas) Act 1990 and that works are carried out in accordance with the Statement of Reasons required by The Planning (Listed Buildings and Conservation Areas) (Heritage Partnership Agreements) Regulations 2014.

Informative: Other external staircases not covered by the list descriptions are subject to the same approach as the CLP Works/Type 2B Works.

7.6 Detailing of safety works on internal handrails and balustrades LBHPA2A6

7.6.1 The following conditions apply to Arts A and B, the Chichester 1 Building, Falmer House, the Pevensey 1 and 2 Building and the Shawcross Building:

1. The works hereby permitted must be completed before the end of the ninth year of the date of this LBHPA.
2. Before any works are begun written notification of the intended start of the works is to be submitted to The Council.
3. All works are to be executed according to the details shown at Annex E4.

Reasons for the above mentioned conditions: To ensure that special regard is paid to the interests of the protecting the special character and architectural interest and integrity of the building under Section 16 of the Planning (Listed Buildings & Conservation Areas) Act 1990 and that works are carried out in accordance with the Statement of Reasons required by The Planning (Listed Buildings and Conservation Areas) (Heritage Partnership Agreements) Regulations 2014.

7.7 Signage, External, High Level Lettering (LBHPA2A7)

7.7.1 High level signage has been carefully controlled across the campus to prevent a miscellany of signage from cluttering the clean lines of the buildings.

7.7.2 The following conditions shall apply to Arts A and B, the Chichester 1 Building, Attenborough Centre, the Library, the Pevensey 1 and 2 Building and the Shawcross Building:

1. The works hereby permitted must be completed before the end of the ninth year of the date of this LBHPA.
2. Before any works are begun written notification of the intended start of the works is to be submitted to the City Council.
3. High level lettering shall be: Fret cut aluminium lettering, Franklin Gothic font, powder-coated white. Capital height, generally 300 mm except Library 450 mm. Installed on 30 mm offset pieces.

Reasons for the above mentioned conditions: To ensure that special regard is paid to the interests of the protecting the special character and architectural interest and integrity of the building under Section 16 of the Planning (Listed Buildings & Conservation Areas) Act 1990 and that works are carried out in accordance with the Statement of Reasons required by The Planning (Listed Buildings and Conservation Areas) (Heritage Partnership Agreements) Regulations 2014.

7.8 Mansafe Systems (LBHPA2A8)

3.8.1 The installation of a high level working safety system has been permitted at Falmer House. Similar systems are considered acceptable elsewhere and the following conditions therefore shall apply to Arts A and B, the Chichester 1 Building (excluding the chemistry lecture theatre), Falmer House, the Pevensey 1 and 2 Building and the Shawcross Building:

1. The works hereby permitted must be completed before the end of the ninth year of the date of this LBHPA.
2. Before any works are begun written notification of the intended start of the works is to be submitted to The Council.
3. All works are to be the made a subject of a photographic record, details of which will be submitted to the Partners on an annual basis each year by the 31st March.
4. All works are to be executed according to the typical detail as shown in the Uniline Brochure submitted with previously consented scheme The Council Reference: BH2011/00905 included for reference at Annex E5.

Reasons for the above mentioned conditions: To ensure that special regard is paid to the interests of the protecting the special character and architectural interest and integrity of the building under Section 16 of the Planning (Listed Buildings & Conservation Areas) Act 1990 and that works are carried out in accordance with the Statement of Reasons required by The Planning (Listed Buildings and Conservation Areas) (Heritage Partnership Agreements) Regulations 2014.

7.9 Semi-automation of existing internal doors (LBHPA2A9)

7.9.1 Spence's door arrangement provided a symmetrical appearance to the doorset, each leaf having a vision area and a black push pad to the leading edge. This symmetry can be retained by using a similar vision area to the wide leaf only, with a push pad to the leading edge and a dummy push pad on the hinge side of the vision area. The width of the wide leaf is determined by the central location (in the doorset) of the vision area, and the width of the push pads.

7.9.2 The following conditions will apply to the University Listed Buildings:

1. The works hereby permitted must be completed before the end of the ninth year of the date of this LBHPA.
2. Before any works are begun written notification will be provided to the Partners of the following:
   i. The intended start date of the proposed works
   ii. The scope of works proposed
   iii. A record of the doors to be altered including survey drawings, indicative sections of doorsets (suggested scale 1:5) and a photographic record to be undertaken by a person or body approved by the Council.
   iv. An amended door schedule shall be provided indicating remaining Spence doors and where they have been replaced within each building as relevant.

   Nil response by the Partners within 21 days will be deemed as authorisation of the works.
3. Replacement doors should be installed in accordance with the method above to details as indicated by Drawing 678/01 included at Annex E6.

Reasons for the above mentioned conditions: To ensure that special regard is paid to the interests of the protecting the special character and architectural interest and integrity of the building under Section 16 of the Planning (Listed Buildings & Conservation Areas) Act 1990 and that works are carried out in accordance with the Statement of Reasons required by The Planning (Listed Buildings and Conservation Areas) (Heritage Partnership Agreements) Regulations 2014.

8. CLP WORKS/TYPE 2B WORKS

8.1 The University for some time under an existing non-statutory HPA has developed best practice for works at the University, which are not deemed to affect the special architectural or historic interest of the building such that LBC is required. The works could, in the future be made the subject of application(s) for Lawful Development Certificate(s). For the present time however, the specifications developed remain as guidance only and details are included in Annex F to assist the University in the management of the historic estate.

8.2 Details are included at Annex F for the following works, which might be submitted to the Council as CLP Works at a future date:

CLPW2B1: Flat roofing, subject to perimeter detailing (See Annex F1)
CLPW2B2: Works to brickwork: fixings (See Annex F2)
CLPW2B3: Works to brickwork: re-pointing (See Annex F3)

CLPW2B4: Semi-reflective film on windows (solar control film) (See Annex F4)
CLPW2B5: Cabling over brickwork (internal) (See Annex F5)
CLPW2B6: Data cabling in Arts A (See Annex F6)
CLPW2B7: Library re-partitioning - high-level transoms (See Annex F7)
CLPW2B8: Nosings on steps and staircases (See Annex F8)
CLPW2B9: Signage: External, street lettering (See Annex F9)
CLPW2B10: Signage: Internal (See Annex F10)

9 OTHER AGREEMENT PARTICULARS

9.1 This Deed and will run for a period of ten years (subject to Clauses 9.11 and 9.12 below), with a review period at year five and year nine (such reviews to take place in accordance with Clauses 9.6 to 9.9 below).

9.2 At year nine, any works expected to continue into year ten may require a standalone application for LBC unless the LBHPA is renewed before the expiration of the Agreement, under full consultation and in accordance with Clauses 9.11 and 9.12 below.

9.3 Any other works which go beyond those identified in this Deed and Annexes may require Listed Building Consent in accordance with current legislation, including any demolition or new build. Further detail on when Listed Building Consent will be required is included at Annex G.

9.4 Nothing in this LBHPA restricts or is intended to restrict the proper exercise at any time by the Council of any statutory power, function or discretion in relation to the buildings at the University of Sussex or otherwise.

9.5 The LBHPA will be registered as a local land charge by the Council.

Review, Variation and Termination

9.6 The LBHPA will be reviewed by the parties in the fifth and ninth years of the date of the LBHPA being entered into.

9.7 The Council shall co-ordinate a meeting (the 'Review Meeting') for the Partners in order to discuss the provisions of this document and how the provisions are or have been implemented.

9.8 Should any issues arise from the Review Meeting, the parties shall engage in constructive dialogue to resolve any issues. Should this necessitate modifications to the LBHPA, then the relevant requirements as set out in legislation will be

followed. The Council and the HBMCE shall not unreasonably withhold or delay agreement to any modifications to this LBHPA requested by the University.

9.9 In addition to the Review Meeting at the mid-point of the term of the LBHPA, the Council shall co-ordinate regular (bi-annual) meetings (The Listed Buildings Group meetings) between the Partners, as an informal opportunity to review the running of the LBHPA and address any issues arising, and as an opportunity for the University to appraise the Partners of any emergency works, Type 3 Works or Future Projects anticipated, or the addition, removal or modification of the LBHPA or to the CLP Works. The Council and the HBMCE shall not unreasonably withhold or delay agreement to any modifications to this LBHPA requested by the University.

9.10 This Deed will terminate on the tenth anniversary of the date of the Deed unless the terms of the LBHPA are renewed in accordance with Clauses 9.11 and 9.12 below.

9.11 This LBHPA is renewable for subsequent [10 year terms] upon the written agreement of all parties to this Deed. A request for renewal shall be made to the Council and the HBCME in writing [3] months prior to the termination of the relevant term of the LBHPA. Any renewal request shall set out the reasons and justification for the request and shall be considered in accordance with the Regulations.

9.12 The Council and the HBCME shall not unreasonably withhold or delay agreement to a renewal request. At the time of any such renewal the parties will determine and agree in writing any modifications to this LBHPA including but not limited to the definition of Consented Works and/CLP Works. The Council and the HBMCE shall not unreasonably withhold or delay agreement to a renewal request and/any modifications to this LBHPA requested by the University.

Records

9.13 The University authorities will keep a record of all notes and works under the Deed, including a record of Listed Building Group meetings in the form of archived minutes and at least one copy in hard copy. Each year this record will be submitted electronically by 31st March for the Partners for review.

9.14 Recording by drawing or photography in advance of works secured by condition may be appropriate in certain circumstances, particularly where a degree of harm is outweighed by the benefits of the works. Such conditions should be tailored to the circumstances in each case and any such records made should be deposited with the archived minutes.

9.15 The University authorities will by 31st March each year send written notification to the Council and HBMCE of all works that have been carried out under the LBHPAs or a Lawful Development Certificate as a written record of change to the heritage assets.

Revocation

9.16 The LBHPA can be revoked provided all parties agree to its revocation. Should one or more of the parties disagree with the proposal to revoke then the LBHPA will terminate in the tenth year unless, the parties determine it can continue with/without agreed modifications in accordance with Clauses 9.11 and 9.12 above.

Notices

9.17 Any notice, demand or any other communication served by any party under this LBHPA is to be delivered by hand or sent by first class post, pre-paid or recorded delivery PROVIDED ALWAYS that the Implementation Notice shall only be validly served if it is delivered by way of recorded delivery.

9.18 Any notice, demand or any other communication served is to be sent to the following addresses or to such address as one party may notify in writing to the others at any time as its address for service:

The Chief Executive
BRIGHTON & HOVE CITY COUNCIL
King's House
Grand Avenue
Hove
BN3 2SR

The Registrar and Secretary
THE UNIVERSITY OF SUSSEX
4th Floor Bramber House
Refectory Rd
Falmer
Brighton
BN1 9QU

The Planning and Conservation Director
HISTORIC BUILDINGS AND MONUMENTS COMMISSION FOR ENGLAND
Eastgate Court
195-205 High St
Guildford GU1 3EH

9.19 Unless the time of actual receipt is proved, a notice, demand or communication sent by the following means is to be treated as having been served:

1. If delivered by hand, at the time of delivery;
2. If sent by post, on the second working day after posting;
3. If sent by recorded delivery, at the time delivery was signed for;

9.20 If a notice, demand or any other communication is served after 4.00 pm in a working day, or on a day that is not a working day, it is to be treated as having been served in the next working day.

9.21 Any notice, consent or approval to be given pursuant to the terms of this LBHPA by any party shall not be unreasonably withheld or delayed and the parties to this LBHPA hereby agree to act reasonably in carrying out their functions, obligations and covenants as described in this LBHPA.

9.22 The parties expect the thresholds for formal consent/approval to change over time in an evolving legislative context and as new ways of reducing administrative overlaps are identified.

Signatories

The University of Sussex

Brighton and Hove City Council

Historic Buildings and Monuments Commission for England

Date:

Part 3 ANNEXES

Annex A Site Plan

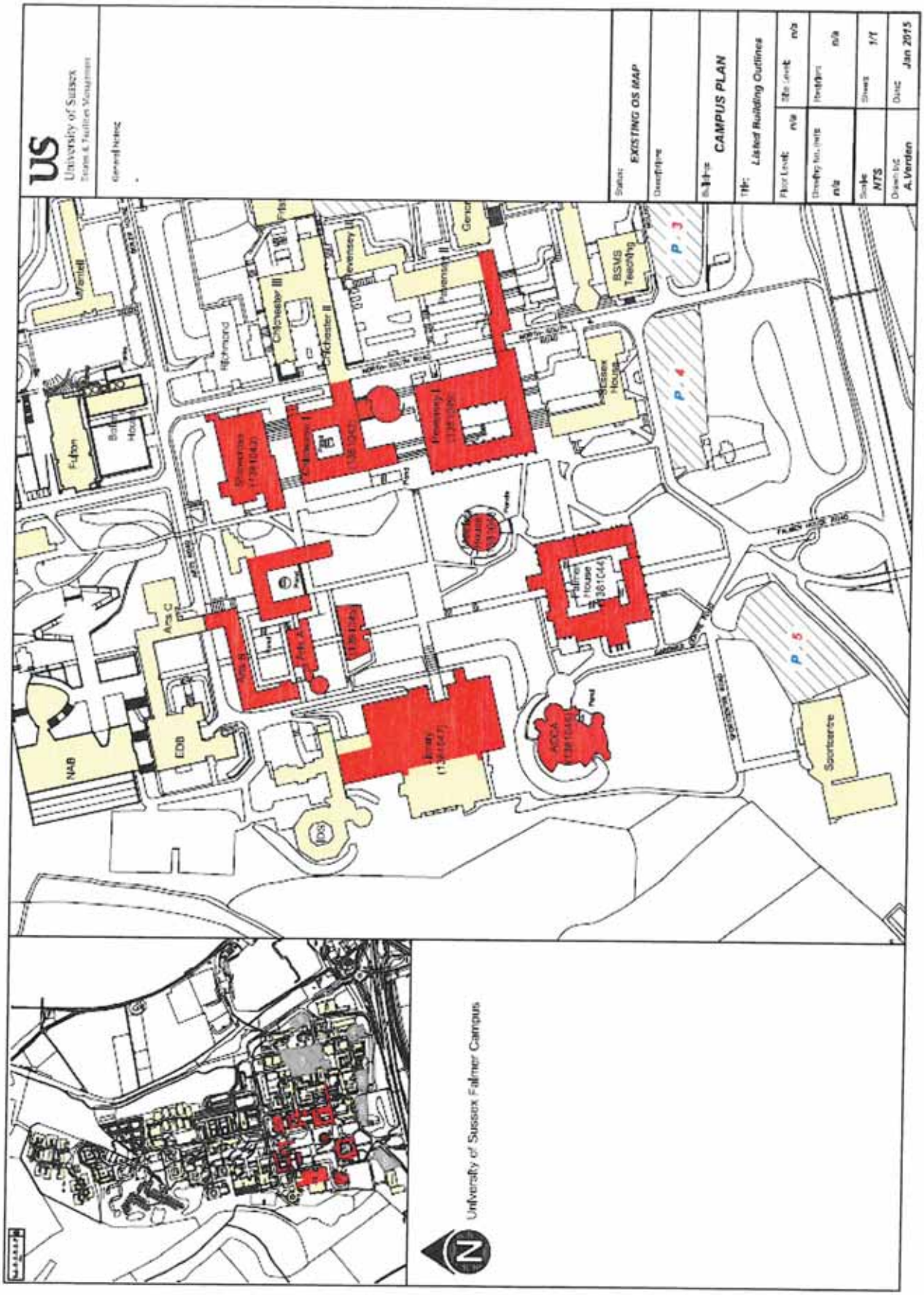

Annex B: List descriptions

Falmer House including Moat within courtyard
List entry Number: 1381044
Date of listing: 30/03/1993
GV I

Central communal building for the university. 1960-62. Designed by Sir Basil Spence. Red brick and bare, board-marked concrete. Timber window frames. Flat roofs with roof-top projections covered in copper. PLAN/EXTERIOR: quadrangular form, with partly open ground floor. Irregular facade of 3 storeys, 'chunkily' detailed, with brick walls separated at floor height by deep, bare, board-marked concrete strips. Ground floor arcades and many of the windows have segmental arches set within the concrete lintels. Former refectory (now a hall) on west, of 2 storeys in height, dominated by segmental barrel vault which breaks above the horizontal parapet of the building. Many 'cells' of the building on the south and east sides are left unenclosed. To north side, main staircase is flint-faced and is given emphasis by V-shaped roof feature. INTERIOR: contains double height former refectory with mezzanine, and fine Ivon Hitchens mural; also debating chamber with complex top-lit octagonally shaped roof and answering octagonal sunken seating area with segmented timber cover; also double height common room with 'chunky' timber staircase. Falmer House was the first building to be constructed on campus and was designed as its focus. Sussex University is historically important as the first of the post-war generation of universities to be founded, planned and built afresh, as a totality. (Architectural Review: Birk: Building the New Universities : October 1963).

Meeting House including kerbstones surrounding moat
List entry Number: 1381048
Date of listing: 30/03/1993
GV II*

University religious meeting house. 1956-66. Sir Basil Spence. Red brick and bare board-marked concrete. Conoidal copper covered roof. Circular plan. Ground floor containing meeting rooms fully glazed and recessed with brick buttresses which project across surround 'moat'. Upper floor containing chapel, with board-marked concrete, treated as blocks with an open bond, having multi-coloured glazing in the gaps between the blocks. Projecting concrete gutter spouts. Irregular cone-like roof with glazed aperture at the top, set on the diagonal. INTERIOR: lit by window-wall of coloured glass and containing original Spence fittings, including square altar on circular concrete pedestal, lectern, a pair of readers desks with concrete and leather seats, and timber sedilia, all set on circular pedestal 3 steps high. Organ case with open decorative brickwork; concrete and timber choir stalls. The Meeting House is an important focal point for the University campus.

Library
List entry Number: 1381047
Date of listing: 30/03/1993
GV II*

University library. 1962-71. Sir Basil Spence. Red brick and bare, board-marked concrete. Timber windows. Flat roof. 2 storeys, treated as 'giant order' plus concealed basement. 15 bays to main, eastern facade, facing into Fulton Court. Off-centre entrance occupying 6th and 7th bays from left. Projecting brick buttresses flanking bays 3, 10 and 13 from the left. Vertical strip windows punctuate large areas of blind brick wall. Returns with projecting buttresses. Extension to north for Institute of Development Studies is not included. INTERIOR: not inspected.

Arts A and B including courtyard pool
List entry Number: 1381045
Date of listing: 30/03/1993
GV II*

University arts building. 1962-66. Sir Basil Spence. Red brick and bare board-marked concrete. Timber windows. Flat roofs. Single storey lecture theatre block to south with staggered walls and tower comprising paired slabs of concrete linked near the base. Blind walls. Courtyard to north with cloister walls to 3 sides, beneath segmental arches; pool to fourth side. 2-storey buildings to east and west; 4-storey range to north. Each have vertical articulation with strips of brick between windows. Arts A extension of 1992 is not included. INTERIOR: not inspected.

Mathematical and Physical Sciences I including staircase to south and east to west wing attached to east: Pevensey Building
List entry Number: 1381049
Date of listing: 30/03/1993
GV II*

Physics building. 1960-62. Designed by Sir Basil Spence. Red brick with bare, board-marked concrete. Timber frames to windows. Flat roof. Courtyard plan with wing projecting to east. Main facade, facing west into Fulten Court, of 3 storeys, 11 bays, treated as a 'giant order', with windows recessed behind projecting brick buttresses topped by projecting concrete cornice with segmental arches to underside. Open arcade to ground floor with segmental arched concrete lintels above; first floor windows also topped by segmental arched concrete lintels. Rear north-south wing, attached to the eastern projection, not included in this listing. INTERIOR: not inspected.

Chichester Building including Molecular Science I including Chemistry Lecture Theatre and staircase to S
List entry Number: 1381042
Date of listing :30/03/1993
GV II*

University chemistry building. 1962-65. Sir Basil Spence. Red brick and bare, board-marked concrete. Timber windows. Flat roofs. Courtyard plan with rotunda attached to south containing chemistry lecture theatre, and adjoining flight of steps. 2 storeys and basement.

Horizontal windows with deep concrete lintels. Projecting buttresses between bays, topped by projecting concrete beam ends. Deep concrete parapet. INTERIOR: not inspected.

Engineering (ENGG) and Applied Sciences including staircase adjoining to south
List entry Number: 1381043
Date of listing: 30/03/1993
GV II*

University engineering and applied sciences building. 1964-66. Sir Basil Spence. Red brick, bare board-marked concrete. Timber windows. Flat roof. 3 storeys. South facade of 11 bays with 'giant order' arcade having windows recessed between projecting brick piers. Projecting arched canopy of concrete to fifth bay from the right. Return to west largely blind with single vertical row of windows. Adjoining staircase to south. INTERIOR: not inspected.

Gardner Arts Centre including kerbstones to pool (now known as the Attenborough Centre)
List entry Number: 1381046
Date of listing: 30/03/1993
GV II*

Arts centre including theatre, exhibition spaces and coffee bar. 1967-69. Sir Basil Spence. Brick with some bare concrete. Flat roofs. Comprises complex multi-segmental circular forms, including tall central cylinder with segmental projections and lower surrounding circles and part-circles. Walls largely blind but circles breached in places for vertical slit windows, and sometimes linked by horizontal bands of glazing. Metal window frames. Cafe overlooks small pool of segmental shape. INTERIOR: not inspected.

Annex C: Plan of the University Library, Pevensey 1, Chichester 1, Arts A and B

AREA/BOUNDARY OF LISTED BUILDING

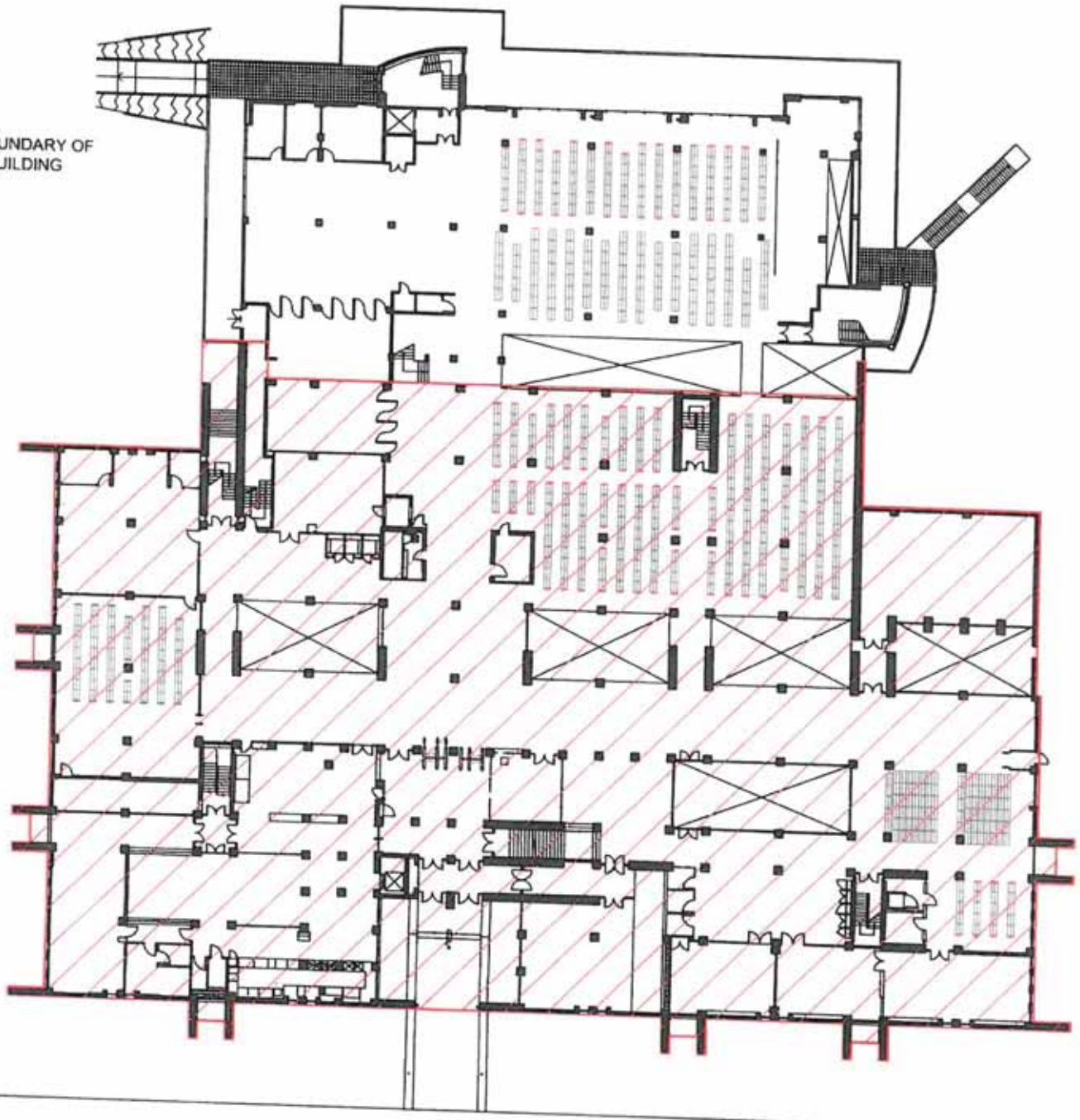

US
University of Sussex
Estates & Facilities Management

General Notes:
-

Status: EXISTING FLOOR PLAN	
Description: N/A	
Building: LIBRARY	
Title: Listed building boundary	
Floor Level: 0	Site Level: n/a
Drawing No. (ref): LIBRARY-0	Revision: N/A
Scale: N/A	Sheet: 1/1
Drawn by: ACV	Date: Jan 2015

AREA/BOUNDARY OF LISTED BUILDING

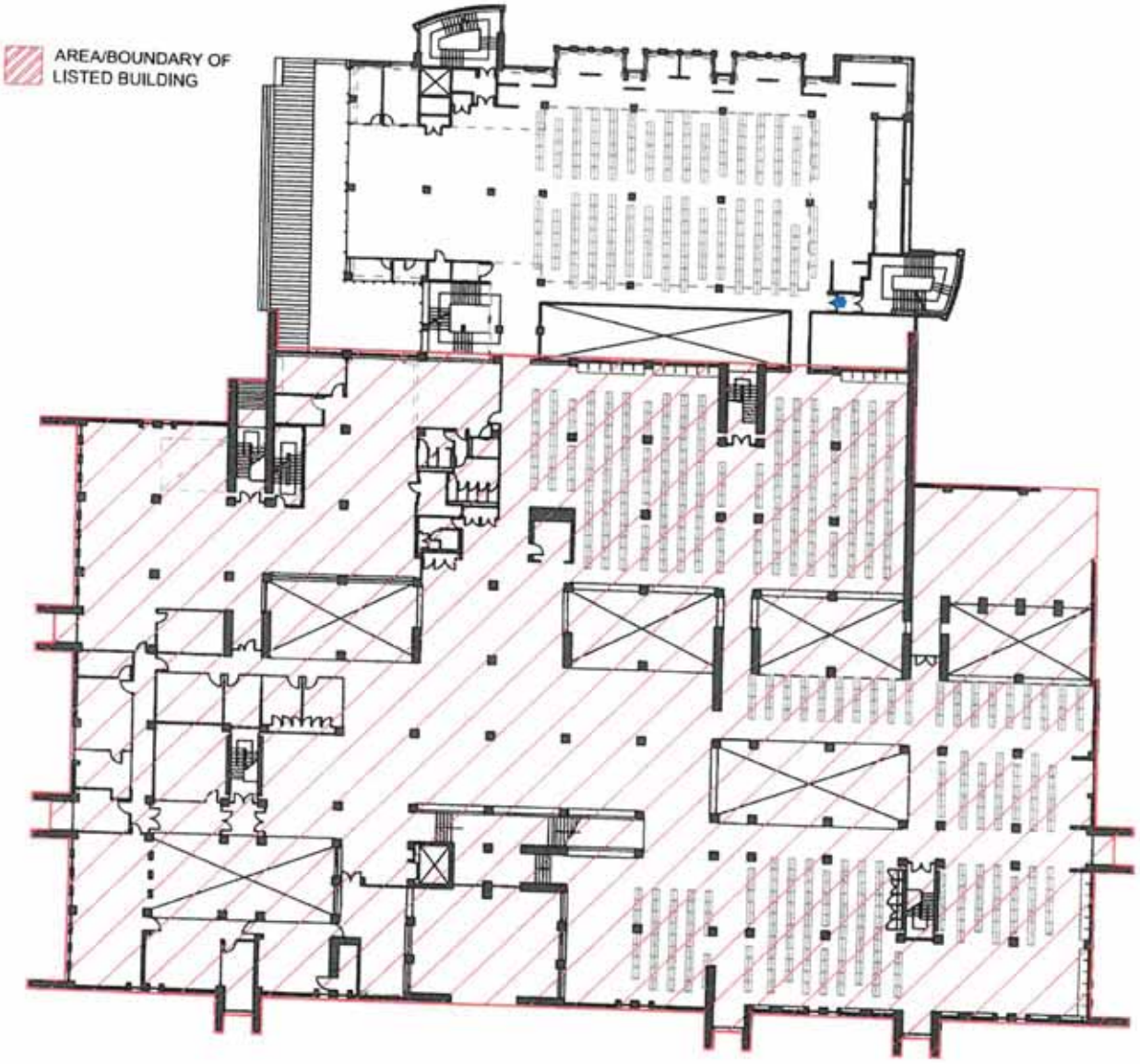

US
University of Sussex
Estates & Facilities Management

General Notes:

-

Status: EXISTING FLOOR PLAN	
Description: N/A	
Building: LIBRARY	
Title: Listed building boundary	
Floor Level: 1	Site Level: -
Drawing No. (ref): LIBRARY-1	Revision: N/A
Scale: NTS	Sheet: 1/1
Drawn by: ACV	Date: Jan 2015

82

AREA/BOUNDARY OF LISTED BUILDING

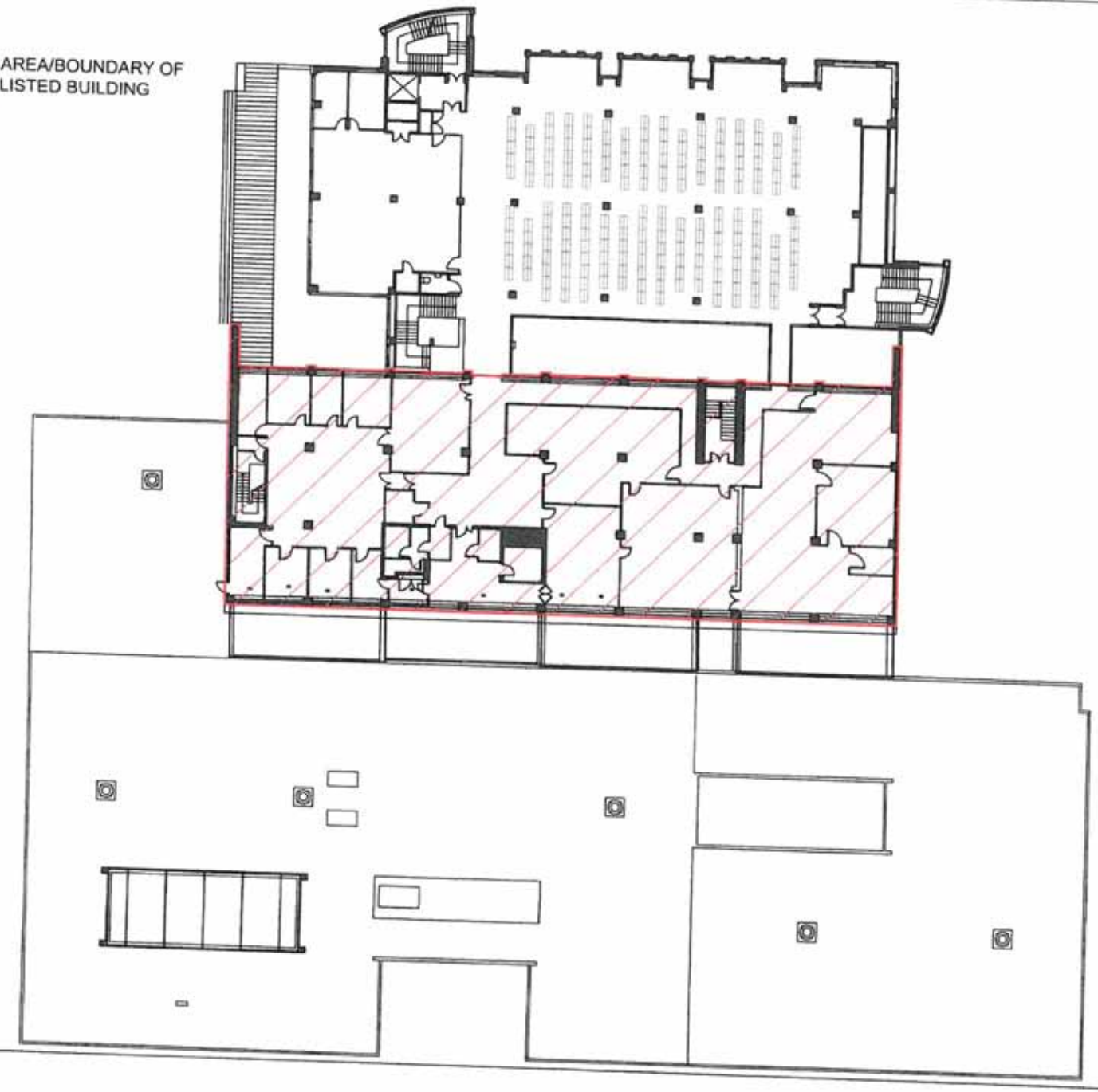

US
University of Sussex
Estates & Facilities Management

General Notes:
-

Status: EXISTING FLOOR PLAN	
Description: N/A	
Building: LIBRARY	
Title: Listed building boundary	
Floor Level: 2	Site Level: -
Drawing No. (ref): LIBRARY-2	Revision: N/A
Scale: NTS	Sheet: 1/1
Drawn by: N/A	Date: Jan 2015

AREA/BOUNDARY OF
LISTED BUILDING

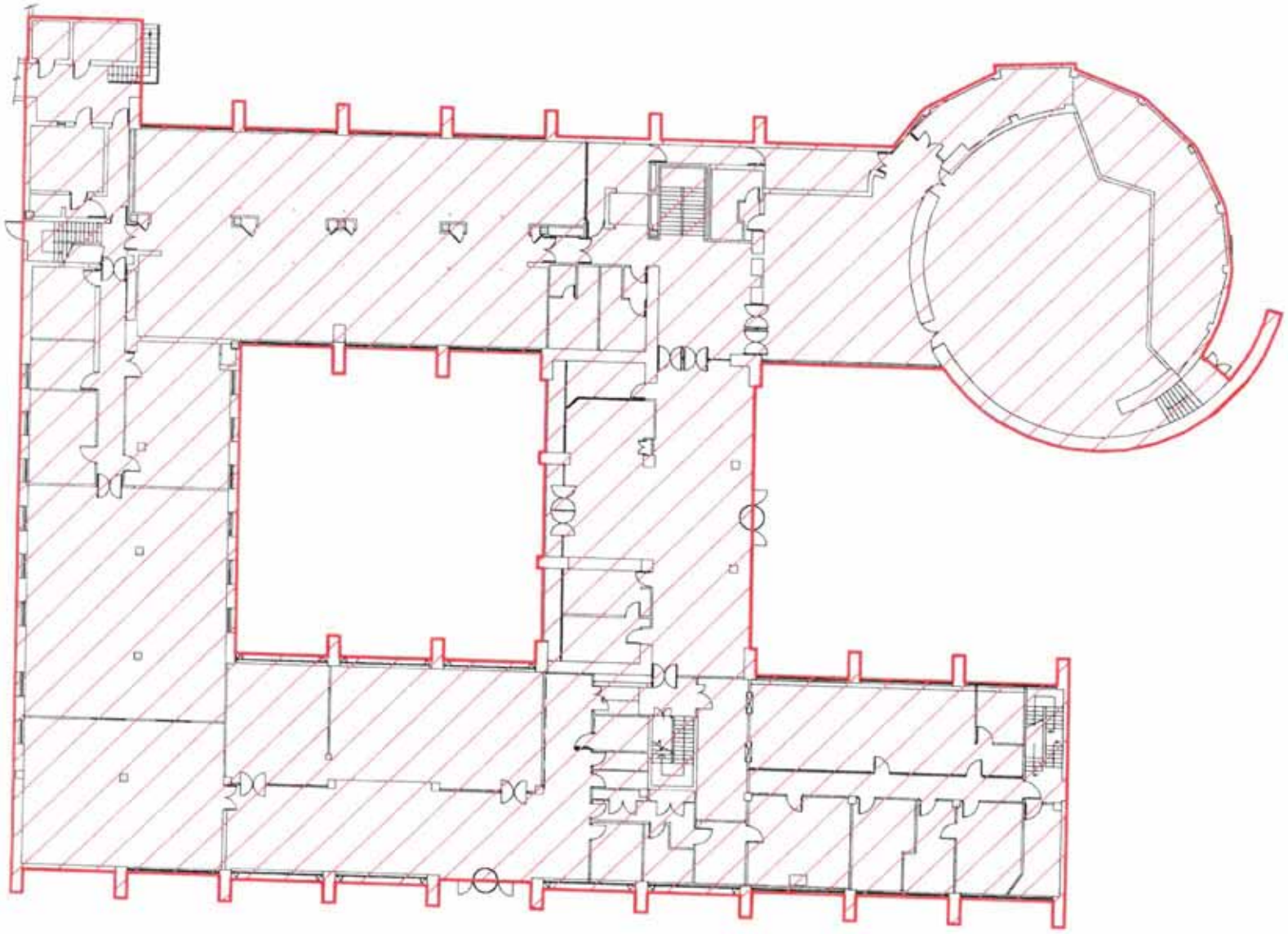

US
University of Sussex

General Notes:
-

Status: *EXISTING FLOOR PLAN*	
Description: *n/a*	
Building: *Chichester I*	
Title: *Listed Building Boundary*	
Floor Level: *0*	Site Level: *B*
Drawing No. (ref): *CHICH1-0*	Revision: *n/a*
Scale: *NTS*	Sheet: *1/1*
Drawn by: *ACV*	Date: *Jan 2015*

AREA/BOUNDARY OF
LISTED BUILDING

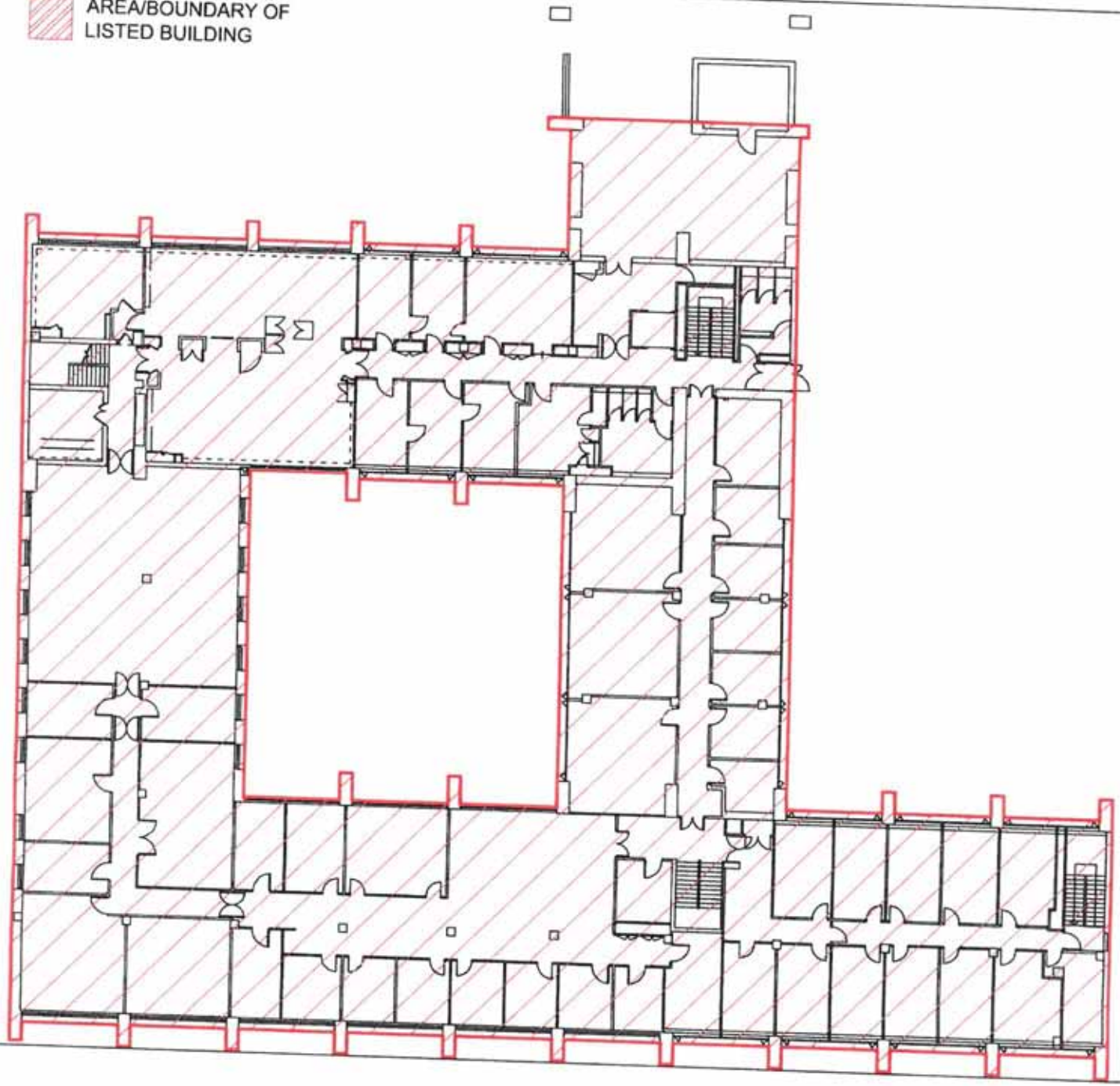

US
University of Sussex

General Notes:
-

Status: *EXISTING FLOOR PLAN*	
Description: *n/a*	
Building: *Chichester I*	
Title: *Listed building boundary*	
Floor Level: *1*	Site Level: *C*
Drawing No. (ref): *CHICH1-1*	Revision: *n/a*
Scale: *NTS*	Sheet: *1/1*
Drawn by: *A.Verden*	Date: *Jan 15*

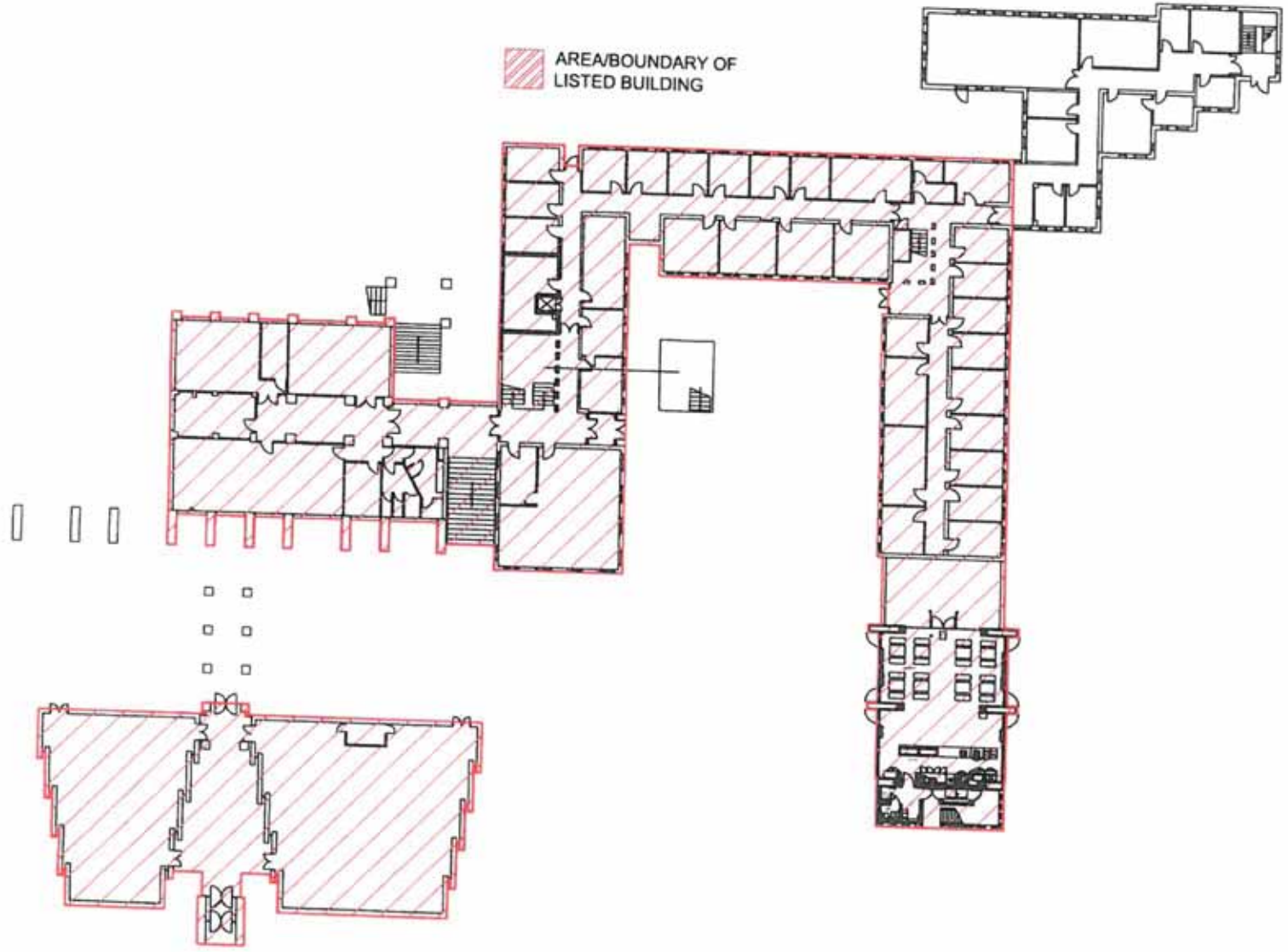

University of Sussex

General Notes:
-

Status: EXISTING FLOOR PLAN	
Description: n/a	
Building: Arts Building A	
Title: Listed building boundary	
Floor Level: 0	Site Level: A
Drawing No. (ref): ARTSA-0	Revision: n/a
Scale: NTS	Sheet: 1/1
Drawn by: A.Verden	Date: Jan 2015

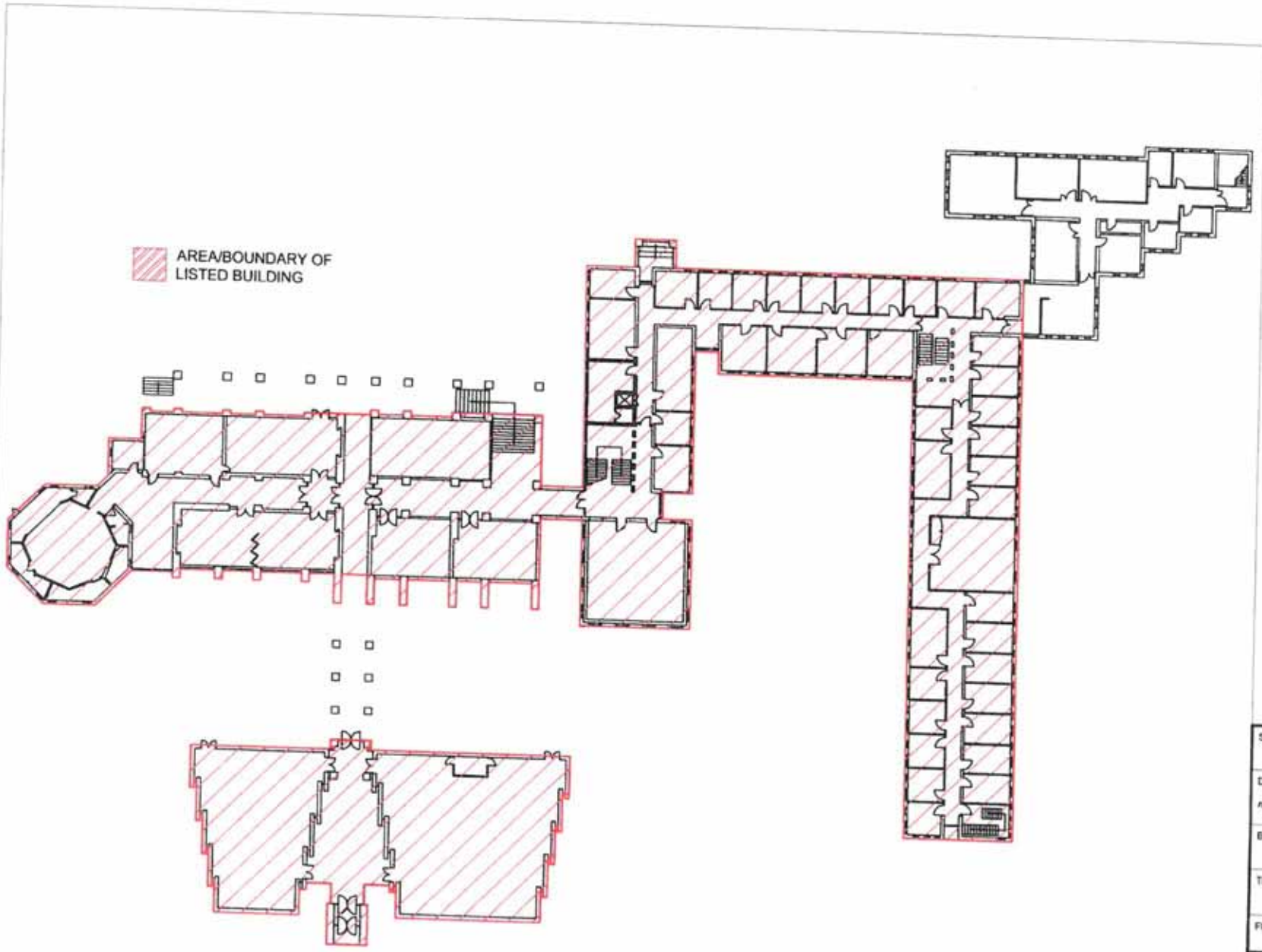

US
University of Sussex

General Notes:
-

Status: *EXISTING FLOOR PLAN*	
Description: *n/a*	
Building: *Arts Building A*	
Title: *Listed building boundary*	
Floor Level: *1*	Site Level: *B*
Drawing No. (ref): *ARTSA-1*	Revision: *n/a*
Scale: *NTS*	Sheet: *1/1*
Drawn by: *A.Verden*	Date: *Jan 2015*

AREA/BOUNDARY OF
LISTED BUILDING

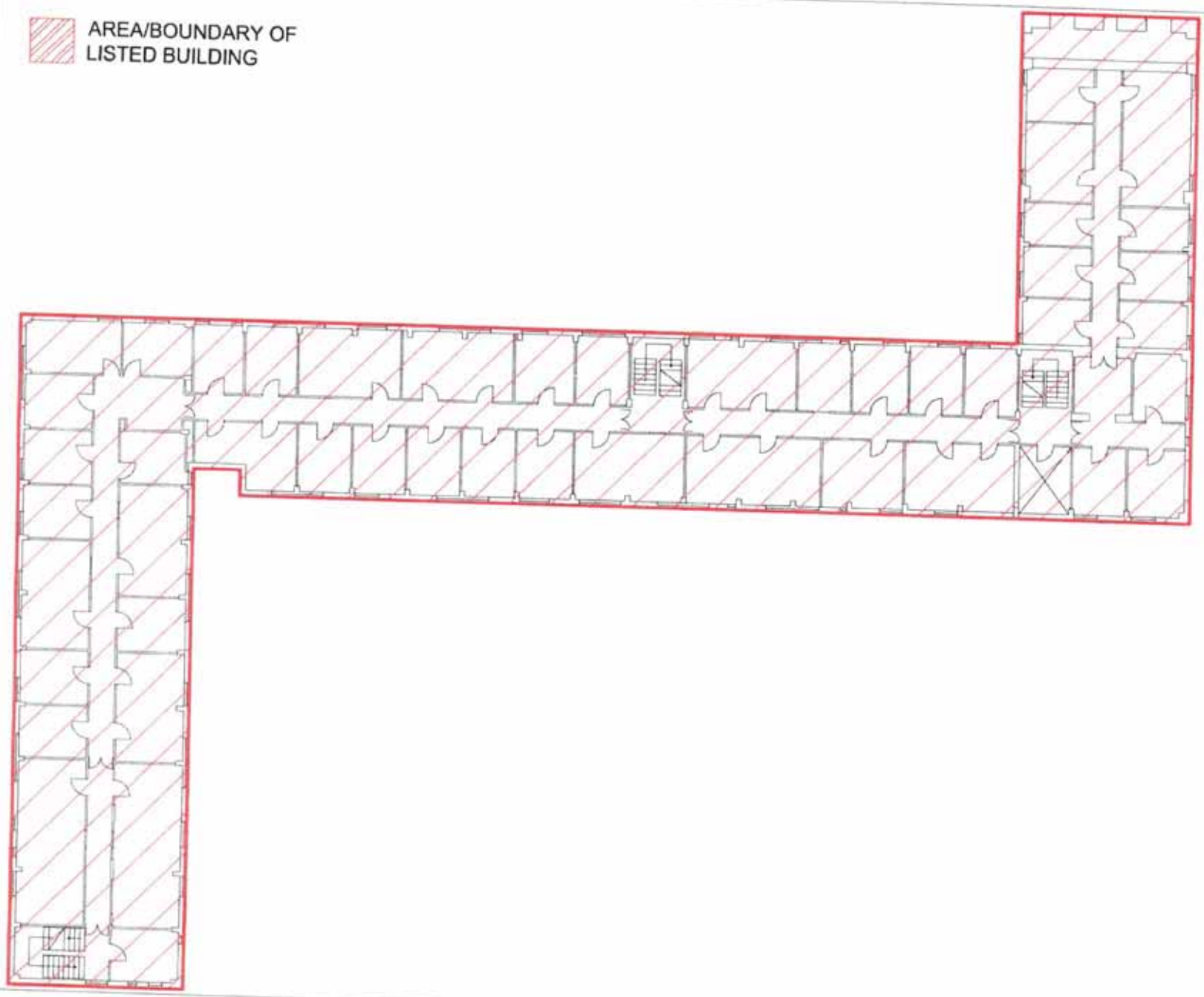

University of Sussex
Estates & Facilities Management

General Notes:

-

Status: EXISTING FLOOR PLAN	
Description: n/a	
Building: Arts Building B	
Title: Listed building boundary	
Floor Level: 3	Site Level: D
Drawing No. (ref): ARTSB-3	Revision: n/a
Scale: NTS	Sheet: 1/1
Drawn by: A.Verden	Date: Jan 2015

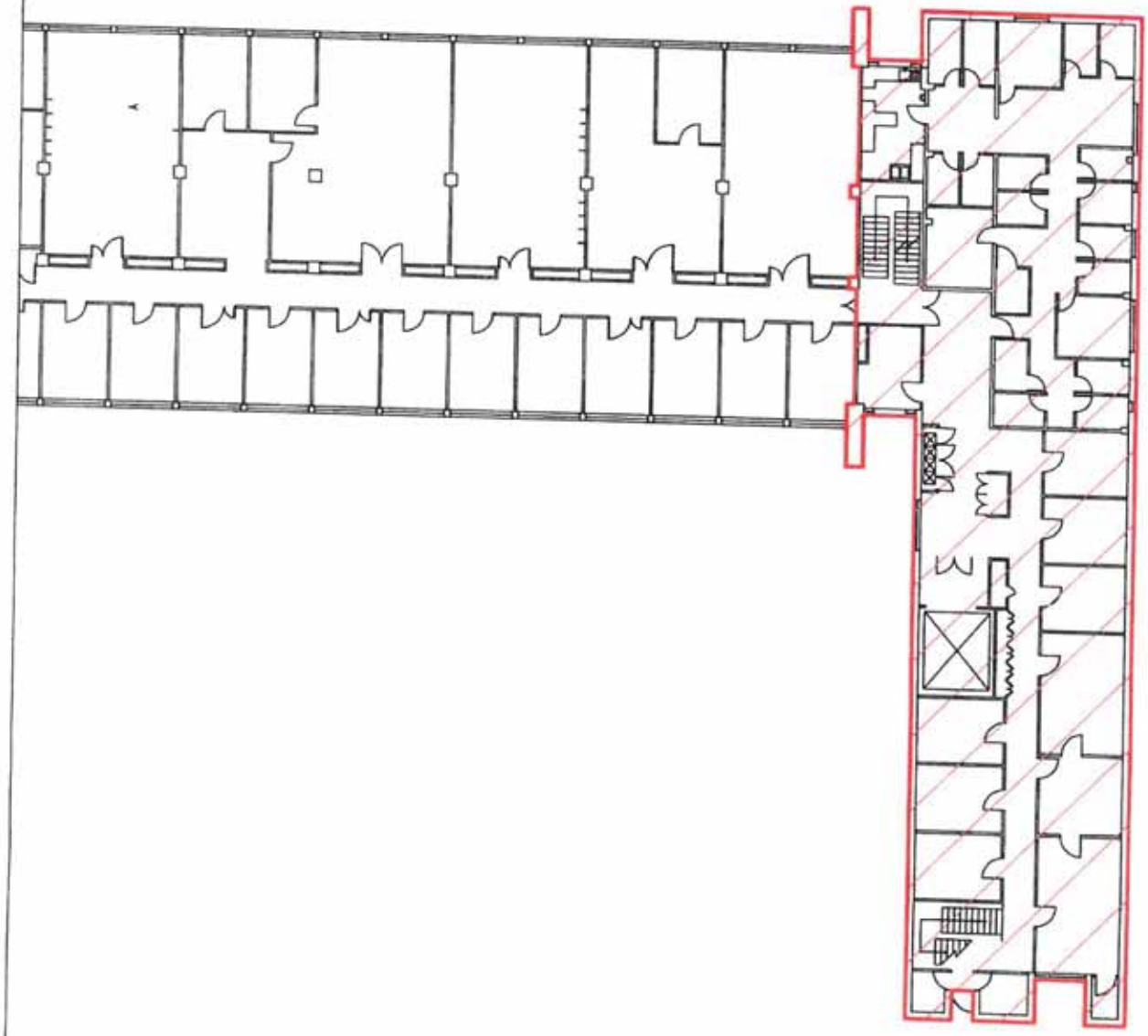

AREA/BOUNDARY OF LISTED BUILDING

University of Sussex
Estates & Facilities Management

General Notes:
-

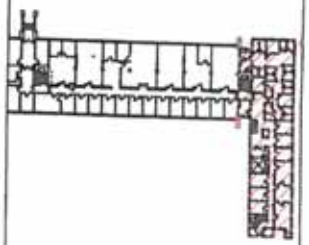

Status: EXISTING FLOOR PLAN	
Description: n/a	
Building: Pevensey II	
Title: Listed building boundary	
Floor Level: 4	Site Level: E
Drawing No. (ref): PEVEN2-4	Revision: n/a
Scale: NTS	Sheet: 1/1
Drawn by: A.Verden	Date: Jan 2015

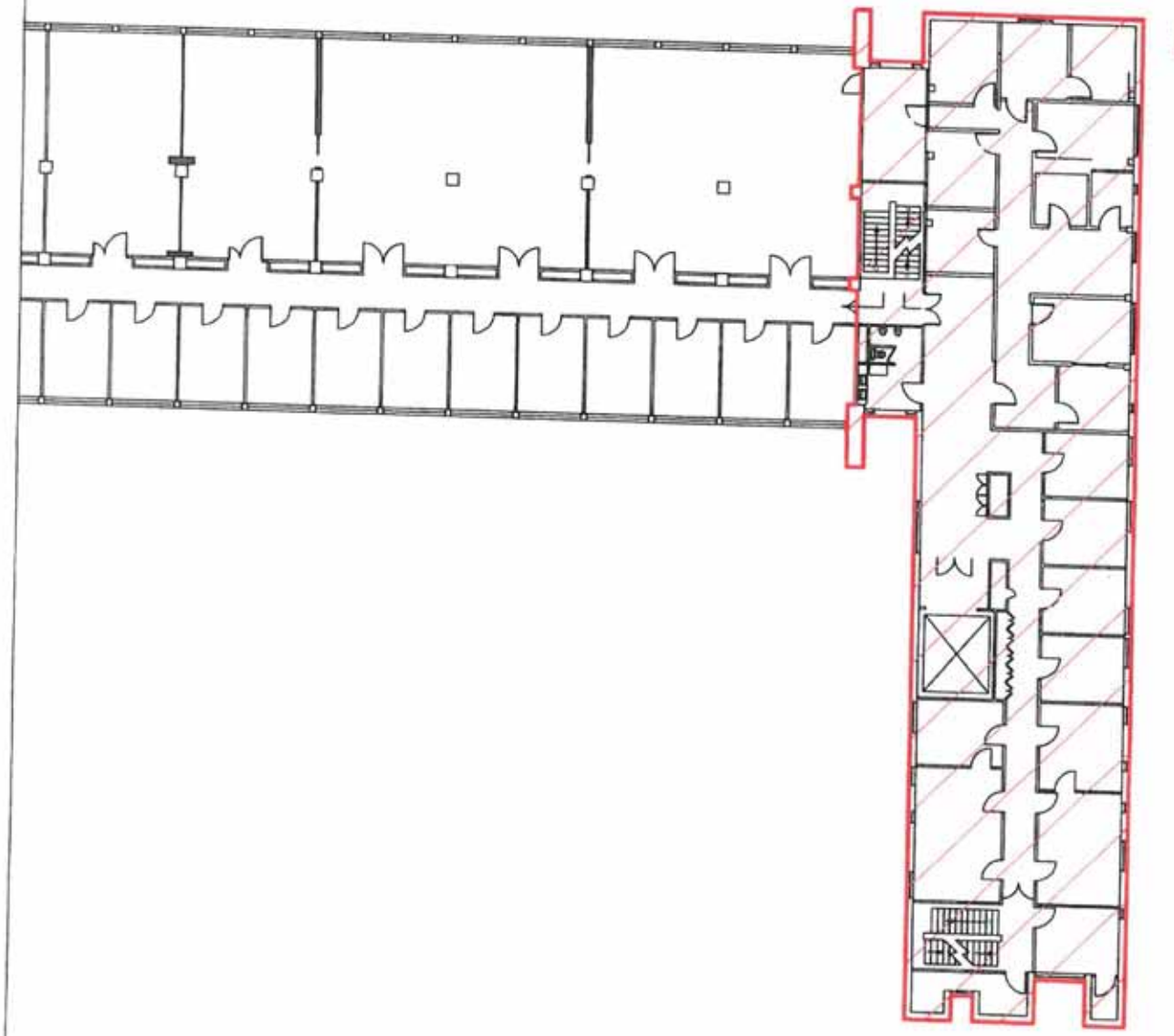

AREA/BOUNDARY OF LISTED BUILDING

University of Sussex
Estates & Facilities Management

General Notes:

-

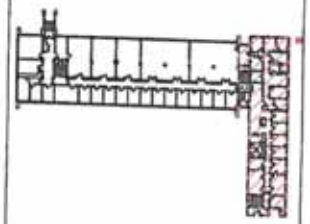

Status: EXISTING FLOOR PLAN	
Description: n/a	
Building: Pevensey II	
Title: Listed Building Boundary	
Floor Level: 5	Site Level: F
Drawing No. (ref): PEVEN2-5	Revision: n/a
Scale: NTS	Sheet: 1/1
Drawn by: A.Verden	Date: Jan 2015

Annex D Photographic Record of the buildings and Spence furniture audit at time of signature of LBHPA

D.1 A photographic record of the general condition of the listed buildings, typical repairs (good and bad) and a record of the original Spence fitted furniture has been undertaken. Copies of this record are held in the following locations:

- The Council : S Drive under Environment/Conservation/MSOffice/Listed Buildings/Major Listed Buildings/University of Sussex
- The University: G Drive under efm/efm_sussexpartners/English Heritage Partnership Agreement/Record Photographs Feb20014/140207 UoS
- HBMCE: S:\SEAST\NPCD SE\SOUTH EAST CASES\East Sussex\Brighton and Hove\AREAS\Sussex University\HPA

D.2.1 An audit of remaining Spence furniture in Lecture theatres was undertaken by the Partners in Spring 2014. Below is a summary of remaining furniture existing at the time of the signature of the LBHPA:

Building (LE Entry Number)	Lecture Theatre Reference	Seating and desks	Projection box	Lectern/console	Panelling	Floor	Blackboard
Arts A and B (1381045)	A1	None remaining	N/A	None remaining			No
Arts A and B (1381045)	A2	None remaining	N/A	None remaining			No
Arts A and B (1381045)	A103	Seating intact; desks intact but renewed	N/A	None remaining			Yes
Arts A and B (1381045)	A5	Seating (benches and chairs) and desks intact	N/A	None remaining		Covered	Yes
Pevensey 1 (1381048)	1A7	None remains	N/A	Yes, but altered	Renewed	Renewed timber floor	No
Pevensey 1 (1381048)	1A6	None remains	N/A	None remaining	Yes at rear	Yes	No
Chichester 1 (1381042)	C1-013	None remains		None remaining		Renewed	No
Shawcross (1381043)	AS1	Yes, chairs	N/A	Yes, altered	Yes	Covered	Yes
Shawcross (1381043)	AS2	Yes, chairs	Yes	Yes, altered	Yes	Covered	Yes
JMS (unlisted)	1A1	Yes	Yes	None remains	N/A	Covered	Yes
Richmond (unlisted)	AS3	Yes	Yes	Yes, original location?	Renewed/ altered	Covered	Yes and original projector screen

D.2.2 An audit of remaining Spence laboratory and library furniture was undertaken by the Partners in Spring 2015. Below is a summary of remaining furniture existing at the time of the signature of the LBHPA:

Building (LE Entry Number)	Location	Benches	Under bench cupboards (No. doors)	Wall mounted cupboards	Stools	Drawer Units (No. drawers)	Fume Cabinets	Meeting Table	Armchair	2 seater sofa	Desks	Note tables	Bookshelves	Desk Chairs
Pevensey 1 (1381048)	1A8 Technician Store	3 altered	3	3	1	N/A	N/A	N/A	N/A	N/A	N/A	N/A	N/A	N/A
Pevensey 1 (1381048)	1A5 Technician Store	2	4 x 2No.	6	N/A	4: 2 x 4No.; 1 x 3No.; 1 x 9No.	N/A	N/A	N/A	N/A	N/A	N/A	N/A	N/A
Pevensey 1 (1381048)	2D12	6 plus 5 very altered	6 x 2No.	5	5	23: 6 x 4No.; 8 x 3No., 5 x 9No.; 4 x 5No.	N/A	N/A	N/A	N/A	N/A	N/A	N/A	N/A
Pevensey 1 (1381048)	2A6	12, plus 2 fixed		12 (differing sizes)	3	28: 13 x 4No.; 11 x 3No.; 4 x 5No.	N/A	N/A	N/A	N/A	N/A	N/A	N/A	N/A
Chichester 1 (1381042)	CI-131	2: 1 x peninsular; 1 x lab bench unit	N/A	N/A	12	N/A	N/A	N/A	N/A	N/A	N/A	N/A	N/A	N/A
Chichester 1 (1381042)	CI-022	N/A	4 (differing sizes)	N/A	4	6: 2 x 4No.; 4 x 4No.	1	N/A	N/A	N/A	N/A	N/A	N/A	N/A
Chichester 1 (1381042)	CI-020	5 altered	6: 2 x 1No.; 4 x 2No.	7	3	3: 2 x 4No.; 1 x 5No.	N/A	N/A	N/A	N/A	N/A	N/A	N/A	N/A
Chichester 1 (1381042)	CI-019	52 (various)	70 x 1No.	18	N/A	29: 2 x 3No.; 27 x 4No.	N/A	8	N/A	N/A	N/A	N/A	N/A	N/A

Chichester 1 (1381042)	CI-018	3 (various)	6: 3 x 2No.; 3 x 1No.;	2	1	3: 2 x 4No.; 1 x 9No.	1	N/A	N/A	N/A	N/A	N/A	N/A	N/A
Shawcross (1381043)	E1-1-08	N/A	N/A	N/A	N/A	N/A	N/A	N/A	4	1	N/A	N/A	N/A	N/A
Shawcross (1381043)	E1-1-09	N/A	N/A	N/A	N/A	N/A	N/A	N/A	1	1	N/A	N/A	N/A	N/A
Library (1381047)	Basement	N/A	N/A	N/A	N/A	N/A	N/A	N/A	N/A	N/A	2	N/A	N/A	N/A
Library (1381047)	Ground floor	N/A	N/A	N/A	N/A	N/A	N/A	N/A	26	1	12	5	80	159
Library (1381047)	First floor	N/A	N/A	N/A	N/A	N/A	N/A	N/A	30	N/A	6	N/A	188	77
Library (1381047)	Second floor	N/A	N/A	N/A	N/A	N/A	N/A	N/A	7	1	6	N/A	192	46

Annex E LBHPA Consents Type 2A Works

E1 Repair to facing concrete LBHPA2A1

E1.1 Method E1.2 applies only to Pevensey I and II and the Meeting House; Method E1.3 applies to Falmer House, Chichester I, the Library, Shawcross Building, the Attenborough Centre, Arts A and B.

E1.2 The following two methods for concrete repairs have been developed by the University, BHCC and EH. This is a traditional concrete repair specification, itself very visible, and an elastic coating coloured to the closest match to the existing concrete. The coating is opaque and therefore changes the appearance of the concrete which, left to weather in its natural state, results in the partial exposure of the surface aggregates. This mechanism is only appropriate on surfaces where it has previously been used:

- The contractor is to allow for the removal of any material that reduces bonding or contributes to corrosion by high pressure water or abrasive blasting. Where the exposed reinforcement is displaying signs of chlorine contamination, the contractor is to allow cleaning using low pressure water blasting, The reinforcements should be cleaned to a minimum standard of SA2 or SA2 ½
- Where a reinforcement coating is required, apply to the whole exposed circumference two coats of Sika MonoTop 610
- Apply Sika MonoTop 610 to predampened repair substrate
- Site Adhesion Values: Structural Repair 1.2-1.5 MPa; Non-structural repairs minimum value 0.7 MPa
- Concrete Repair Mortar Application: The contractor is to allow for the supply and application of Sika MonoTop 615 or similar approved cementitious polymer modified mortar in line with BS EN 1504-3:2005, to the pre-wetted surfaces.
- Coating – Elastic: After a minimum period of 4 hours and when the primer is completely dry, brush, spray or roller apply 2 coats of Sikagard 550W Elastic at a minimum material consumption of 0.38 litres/m2 per coat to achieve a minimum total dry film thickness of 400 microns. Minimum wet film thickness for a 3 coat application should be 375 microns per coat.
- Alternatively, an equivalent 3 coat application may be achieved by applying Sikagard 550W Elastic at a minimum material consumption of 0.25 litres/m2 per coat to achieve a total dry film thickness of 400 microns. Minimum wet film thickness for a 3 coat application should be 250 microns per coat.

- Allowance should be made for colour group price variations.

E1.3 The second specification was developed to retain the exposed surface aggregate appearance and involves a traditional repair up to a level shallow of the finished profile. The finished profile is then made up with a mainly cementitious surface mortar mix, carefully prepared to match the composition and colour of the background concrete. A sample analysis should be submitted to the Council for agreement.

- To the overall prepared, repaired and unrepaired concrete surfaces apply by brush or spray a minimum of 2 coats of SikaGard 700s Aquastop at a mimimum consumption rate of 0.25 litres/m2 per coat. Coats should be applied 'wet on wet' to ensure saturation. The volume of material required will be dependent on the surface porosity and the effectiveness of the existing impregnation; it should be subject to a site trial. To ensure even coverage, application patterns should follow from the base of the structure upwards.

E2 Metal window replacement LBHPA2A4

E2.1 Applies to Arts A and B, the Chichester 1 Building, Falmer House, the Library, the Pevensey 1 Building and the Shawcross Building

E2.2 In line with condition 4 of LBHPA2A4, replacement windows should be in accordance with previously approved plans, typical details of which are set out in Drawing Nos. 8935G2B/D1, D2, D3, D4, D5, D6, D25, D26, D29/A, D30/A, D31, D54 and D55, included here for ease of reference.

This drawing is the property of CRITTALL WINDOWS Ltd. It is a confidential document and must not be copied, used or its contents divulged without prior written consent.

DO NOT SCALE

OUTSIDE ELEVATIONS

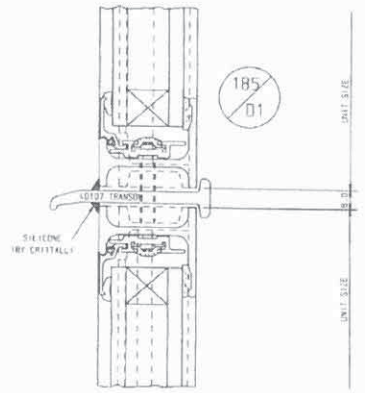

MULLIONS FIXED TOP & BOTTOM
WHERE SCREENS ARE 3m HIGH & OVER

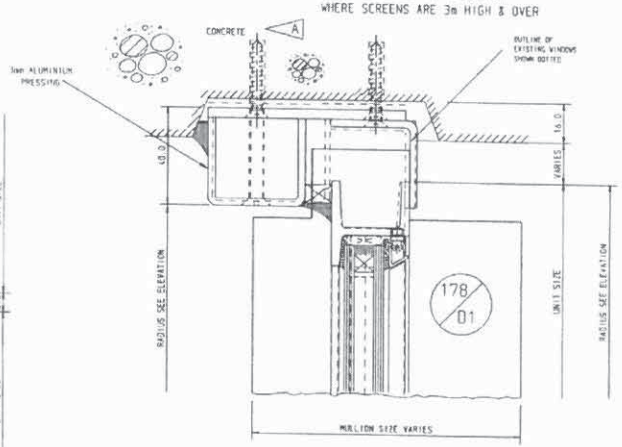

MULLIONS FIXED TOP & BOTTOM
WHERE SCREENS ARE 3m HIGH & OVER

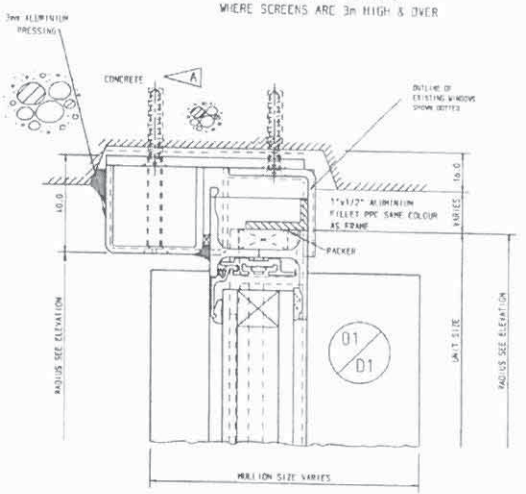

MULLIONS FIXED TOP & BOTTOM
WHERE SCREENS ARE 3m HIGH & OVER

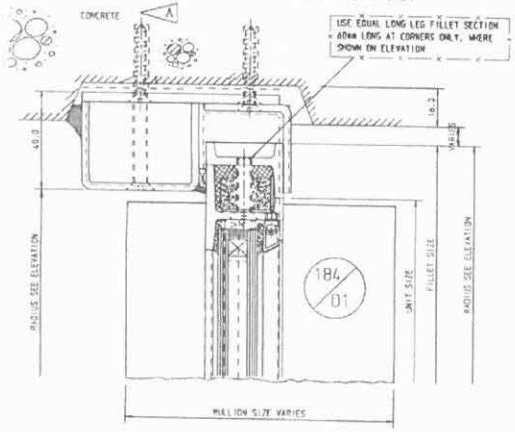

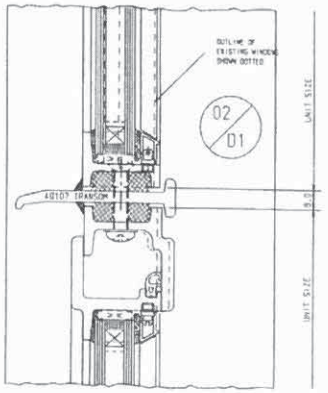

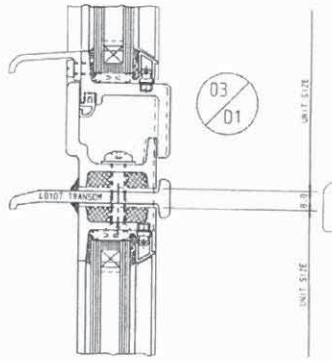

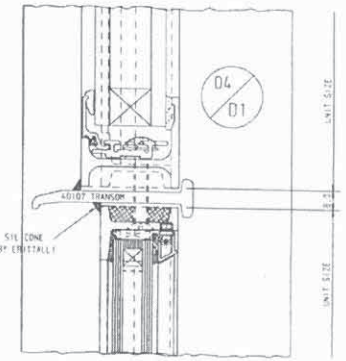

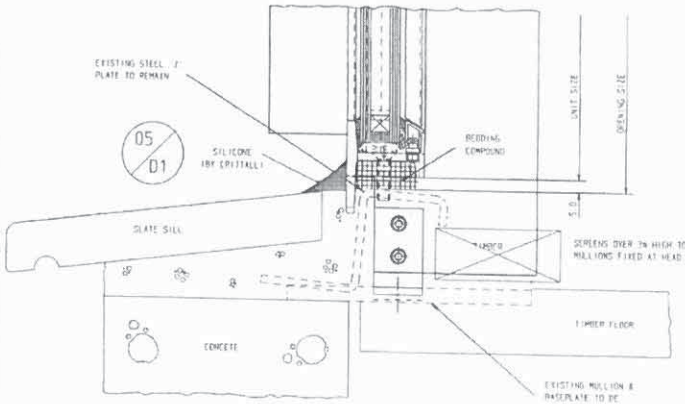

VARIATIONS TO CONTRACT
Final approval of this drawing by the specifier will be deemed to accept payment liability for any time and/or cost variation in accordance with the contract

'BI-METALLIC CORROSION'
The content of this design has taken into consideration bi-metallic corrosion (Galvanic action) effects for the materials used therein and by following the advice given in PD 6484 : 1979.

© CRITTALL WINDOWS LTD. 2007

SPECIFICATION

© DETAILER'S SIGNATURE ALTHOUGHOUT RELEASE FOR PRODUCTION/INSTALLATION

Rev	REVISIONS TO ESTIMATE	Date

Rev	REVISIONS TO DRAWING	Date
C	DETAILS AMENDED	02.02.11
B	TRANSOMES AMENDED	25.10.10
A	MULLION NOTES ADDED	29.09.10

TOLERANCES

OUR PRICES ARE BASED ON OPENINGS FOR WINDOWS BEING SUFFICIENTLY ACCURATE IN SIZE, POSITION, SQUARENESS AND STRAIGHTNESS TO ENABLE WINDOWS TO BE FIXED WITH A MAXIMUM 6mm CLEARANCE BETWEEN WINDOWS, FIXING BRACKETS AND BUILDERS WORK

LEGEND ON SPECIAL DETAILS

External painting by CRITTALL/others

A ..... finish by CRITTALL
Paint by ~~General Contractor~~ CRITTALL

B ~~Polyurethane foam infill by CRITTALL~~

Polyurethane foam/waterproof cement infill NOT within CRITTALL SCOPE OF WORKS

Brickwork etc. to be flush pointed 12mm (½") forward of external face of window

Detail Number
Drawing Number

CRITTALL

Job Title
University of Sussex
Falmer House

Contractor
Sussex Building Company

Architect

Drawn S.A.STRACEY	DATE SEPT 10
Examined by	SCALES 1:1
EST./CONTRACT/DRWG. NO	SHT. NO / ITEMS
893562B	D1
Letter Standard Detail Letter	A B C
Details CD Issue No.	
Detailed by	Dept.
Finish	Fix Region

This drawing is the property of CRITTALL WINDOWS Ltd. It is a confidential document and must not be copied, used or its contents divulged without prior written consent.

DO NOT SCALE

OUTSIDE ELEVATIONS

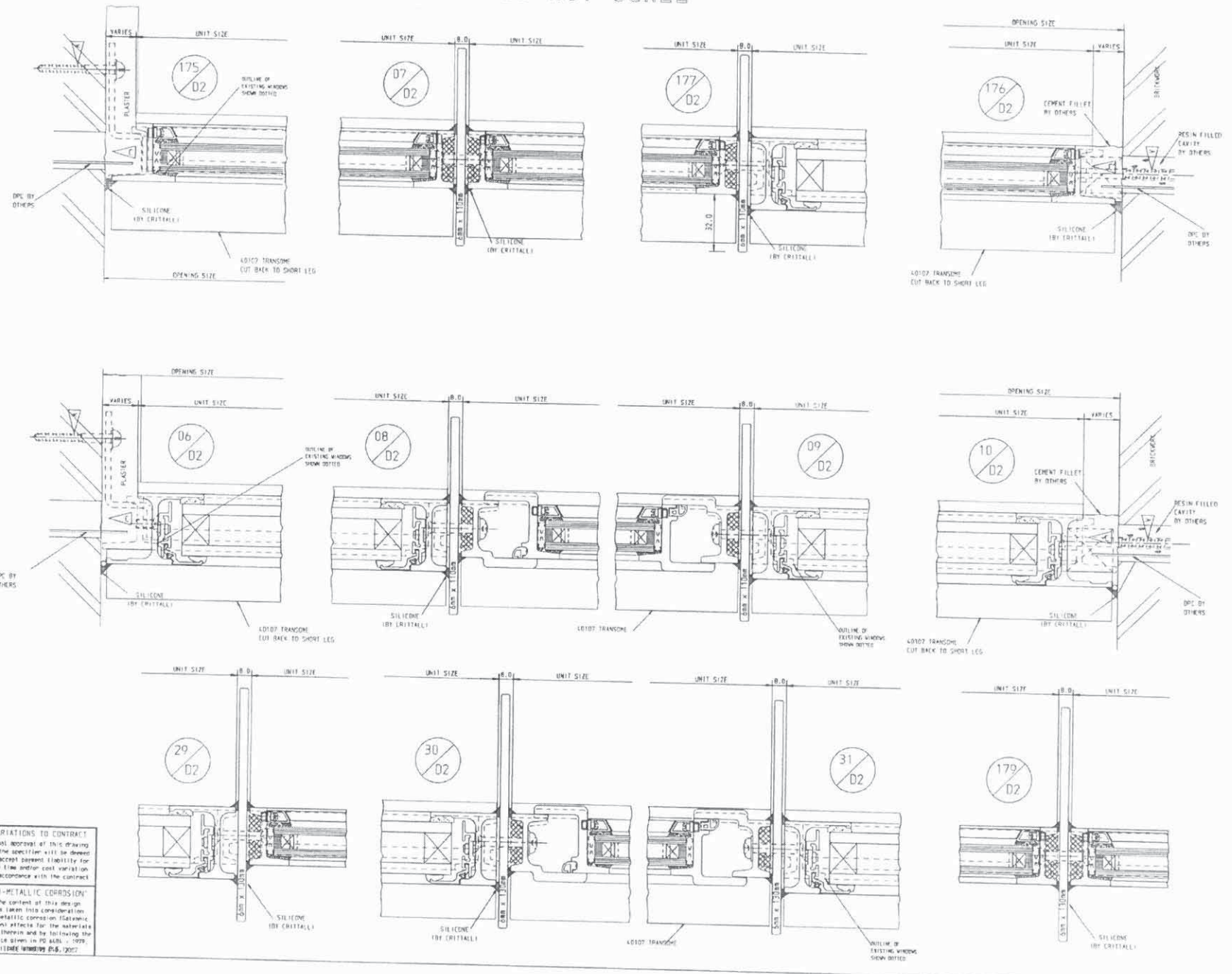

VARIATIONS TO CONTRACT

Final approval of this drawing by the specifier will be deemed to accept payment liability for any time and/or cost variation in accordance with the contract

"BI-METALLIC CORROSION"

The content of this design has taken into consideration bi-metallic corrosion (Galvanic action) effects for the materials used therein and by following the advice given in PD 6484 : 1979.

© CRITTALL WINDOWS Ltd. 2007

SPECIFICATION

® DETAILER'S SIGNATURE AUTHORISES RELEASE FOR PRODUCTION/INSTALLATION

Rev	REVISIONS TO ESTIMATE	Date

Rev	REVISIONS TO DRAWING	Date
C	DETAILS 175 & 176 ADDED	31.01.11
B	TRANSOME AMENDED	25.10.10
A	DETAILS 29, 30 & 31 ADDED	22.09.10

TOLERANCES

OUR PRICES ARE BASED ON OPENINGS FOR WINDOWS BEING SUFFICIENTLY ACCURATE IN SIZE, POSITION, SQUARENESS AND STRAIGHTNESS TO ENABLE WINDOWS TO BE FIXED WITH A MAXIMUM 6mm CLEARANCE BETWEEN WINDOWS, FIXING BRACKETS AND BUILDERS WORK

LEGEND ON SPECIAL DETAILS

External painting by CRITTALL/others

A — ..... finish by CRITTALL
Applied by ~~General Contractor~~/CRITTALL

B — ~~Polyurethane foam infill by CRITTALL~~

C — Polyurethane foam/waterproof cement infill NOT within CRITTALL SCOPE OF WORKS

D — Brickwork etc. to be flush pointed 12mm (or) forward of external face of window

Detail Number / Drawing Number

CRITTALL

Job Title: University of Sussex
Falmer House

Contractor: Sussex Building Company

Architect:

Drawn: S.A.STRACEY	Date: SEPT 10
Examined by:	Scales: 1:1
EST./CONTRACT/DRVG No: 893628	Sht. No: D2
Issued/Latest Revision: A B C	Items:
Detailed by:	Date:
Finish:	File Register:

44

This drawing is the property of CRITTALL WINDOWS Ltd. It is a confidential document and must not be copied, used or its contents divulged without prior written consent.

DO NOT SCALE

OUTSIDE ELEVATIONS

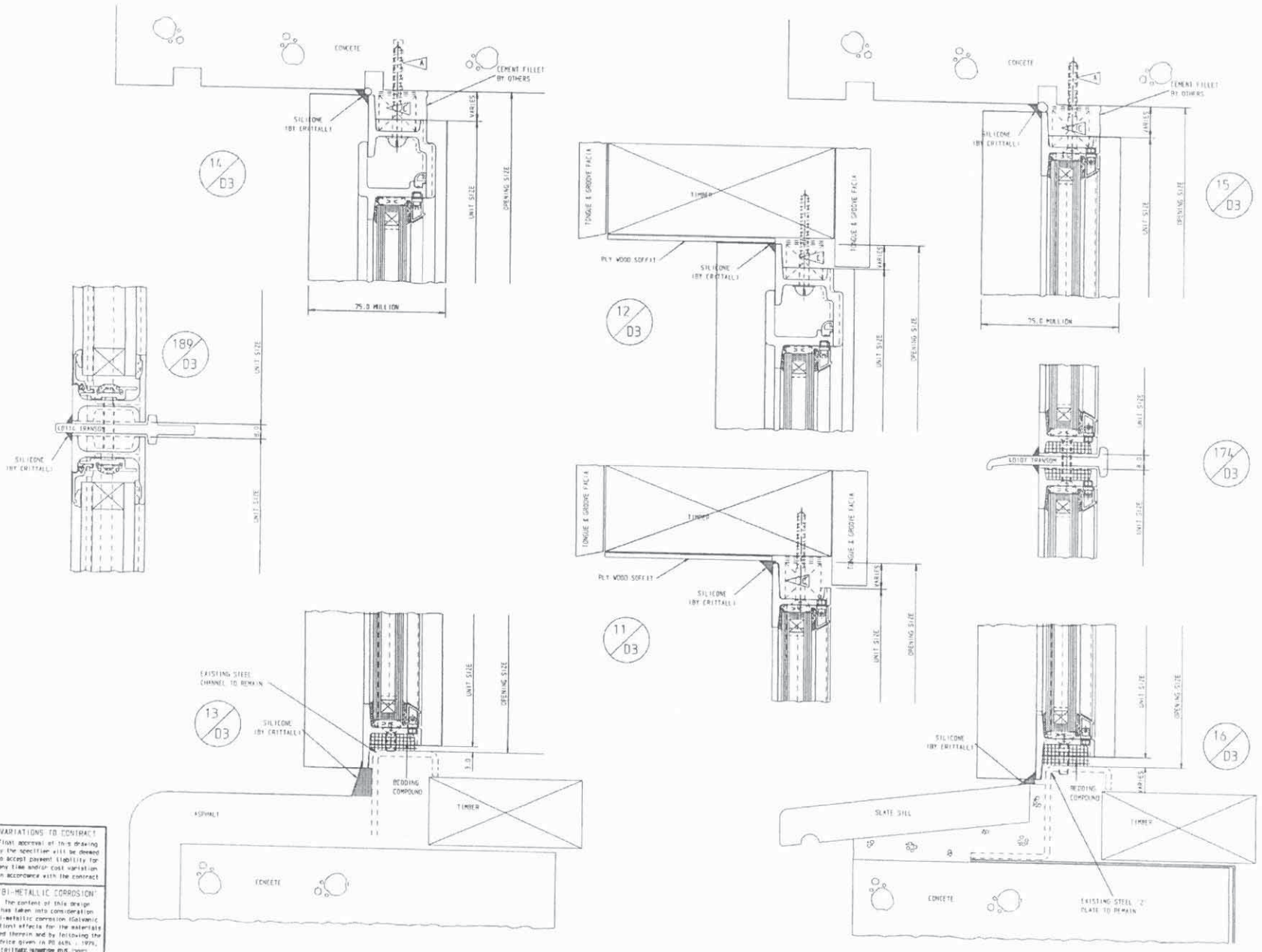

VARIATIONS TO CONTRACT

Final approval of this drawing by the specifier will be deemed to accept payment liability for any time and/or cost variation in accordance with the contract

'BI-METALLIC CORROSION'

The content of this design has taken into consideration bi-metallic corrosion (Galvanic action) effects for the materials used therein and by following the advice given in PD 6484 : 1979.

© CRITTALL WINDOWS LTD. 2007

SPECIFICATION

* DETAILER'S SIGNATURE AUTHORISES RELEASE FOR FABRICATION/INSTALLATION

Rev	REVISIONS TO ESTIMATE	Date

B	DETAIL 189 ADDED	22.02.11
A	DETAILS AMENDED TO W20	31.01.11

Rev	REVISIONS TO DRAWING	Date

TOLERANCES

OUR PRICES ARE BASED ON OPENINGS FOR WINDOWS BEING SUFFICIENTLY ACCURATE IN SIZE, POSITION, SQUARENESS AND STRAIGHTNESS TO ENABLE WINDOWS TO BE FIXED WITH A MAXIMUM 6MM CLEARANCE BETWEEN WINDOWS, FIXING BRACKETS AND BUILDERS WORK

LEGEND ON SPECIAL DETAILS

External painting by CRITTALL/others

A ..... Glass by CRITTALL

B Notes by Designer/Contractor (CRITTALL)

B ~~Polyurethane foam (not) to be CRITTALL~~

C Polyurethane foam/waterproof cement infill NOT within CRITTALL SCOPE OF WORKS

D Brickwork etc. to be flush or not more than 13mm forward of external face of window

Detail Number
Drawing Number

CRITTALL

Job Title
University of Sussex
Falmer House

Contractor
Sussex Building Company

Architect

DRAWN S.A.STRACEY	DATE SEPT 10
Examined by	SCALES 1:1
EST./CONTRACT/DRWG NO	SHEET NO / ITEMS
893562B	03
Issue record Related Letter	A B
Detail QS Issue No.	
Data-tec by	Date / Dist.
Fenlen	File Register

45

This drawing is the property of CRITTALL WINDOWS Ltd. It is a confidential document and must not be copied, used or its contents divulged without prior written consent.

OUTSIDE ELEVATIONS

DO NOT SCALE

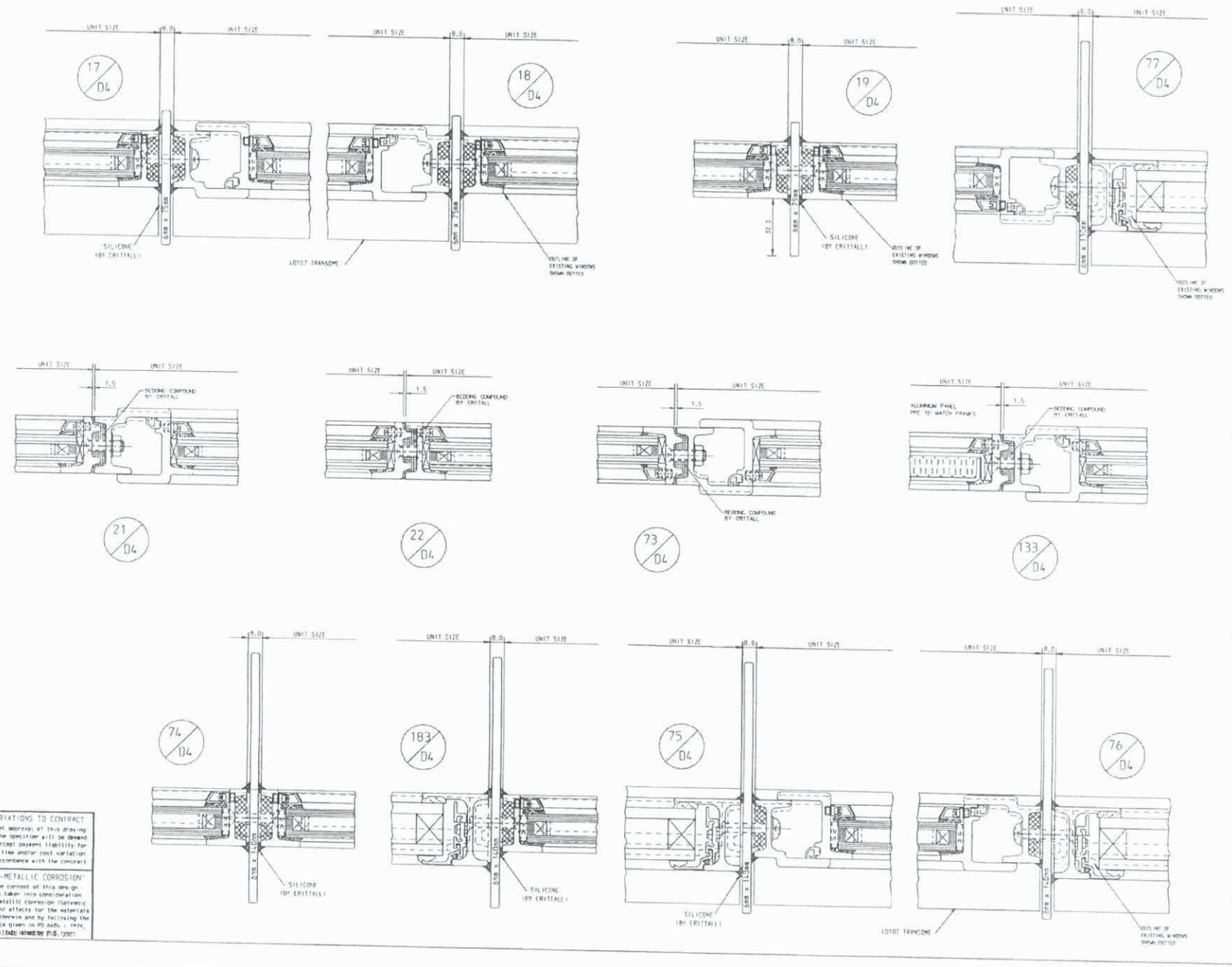

SPECIFICATION

● DETAILER'S SIGNATURE AUTHORISES RELEASE FOR PRODUCTION/INSTALLATION

Rev	REVISIONS TO ESTIMATE	Date
D	DETAILS 17 & 18 AMENDED	02.02.11
C	DETAIL 133 ADDED	26.10.10
D	TRANSOME AMENDED	25.10.10
A	DETAILS ADDED	06.10.10

Rev	REVISIONS TO DRAWING	Date

TOLERANCES

OUR PRICES ARE BASED ON OPENINGS FOR WINDOWS BEING SUFFICIENTLY ACCURATE IN SIZE, POSITION, SQUARENESS AND STRAIGHTNESS TO ENABLE WINDOWS TO BE FIXED WITH A MAXIMUM 5mm CLEARANCE BETWEEN WINDOWS, FIXING BRACKETS AND BUILDERS WORK

LEGEND ON SPECIAL DETAILS

- External pointing by CRITTALL/others
- A ..... plugs by CRITTALL
- Holes by ~~General Contractor~~ CRITTALL
- B ~~Polyurethane foam infill by CRITTALL~~
- C Polyurethane foam/waterproof cement infill NOT WITHIN CRITTALL SCOPE OF WORKS
- D Brickwork etc. to be flush painted 12mm 1½" forward of external face of windows
- Detail Header / Drawing Number

CRITTALL

Job Title: University of Sussex Falmer House

Contractor: Sussex Building Company

Architect:

DRAWN: S.A.STRACEY | DATE: SEPT 10

Examined by: | SCALES: 1:1

EST./CONTRACT/DRWG.Nº: 8935G2B | SHT.Nº: D4 | ITEMS:

Latest comment on last letter: A B C D

Detail DD Issue No.

Detailed by: | Date: | Dist.

Finish: | Fix Region:

VARIATIONS TO CONTRACT

Final approval of this drawing by the specifier will be deemed to accept payment liability for any time and/or cost variation in accordance with the contract.

'BI-METALLIC CORROSION'

The content of this design has taken into consideration bi-metallic corrosion (Galvanic action) effects for the materials used therein and by following the advice given in PD 6484 : 1979.

© CRITTALL Issued by (R.S.) 2007

This drawing is the property of CRITTALL WINDOWS Ltd. It is a confidential document and must not be copied, used or its contents divulged without prior written consent.

OUTSIDE ELEVATIONS

DO NOT SCALE

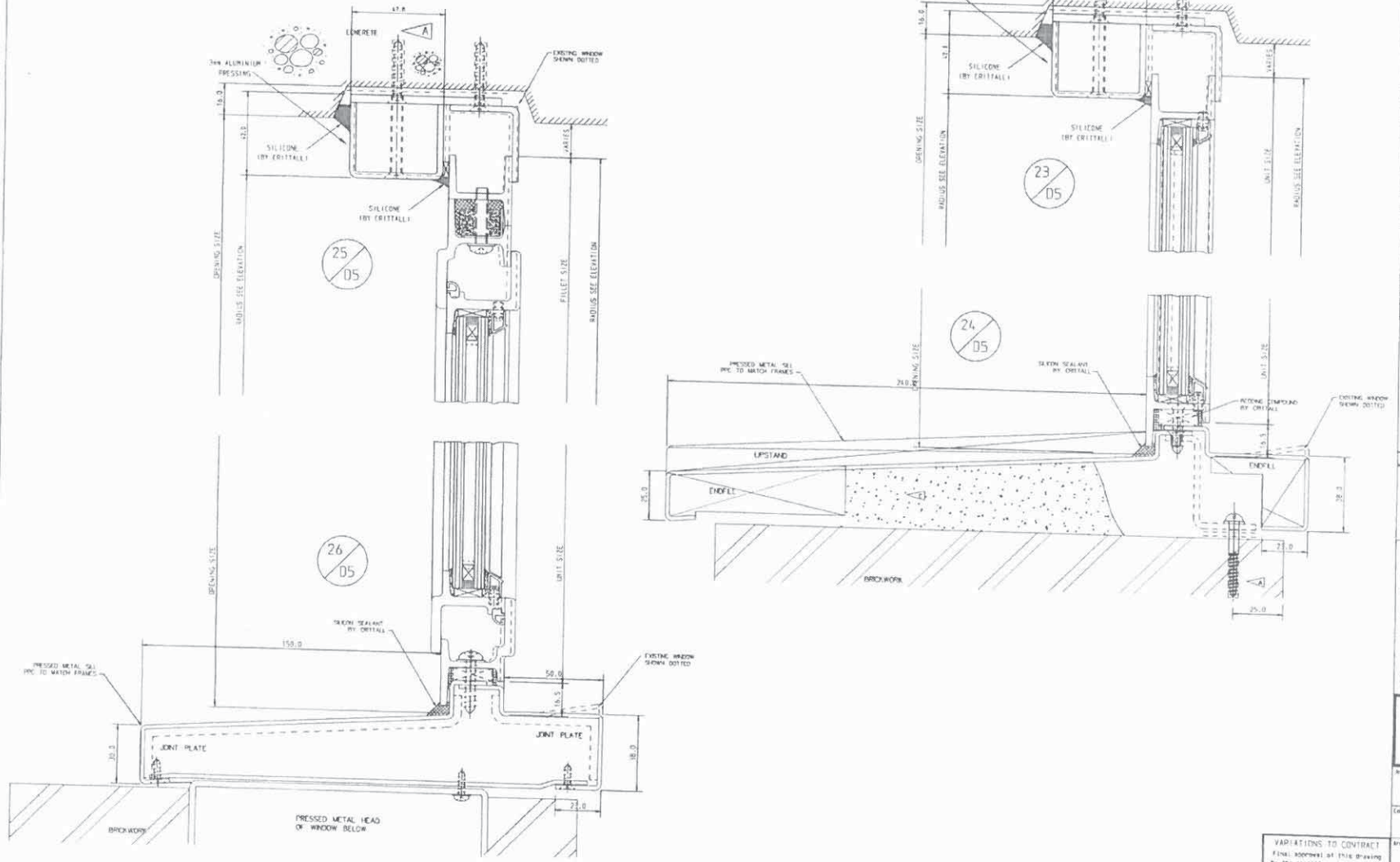

SPECIFICATION

* DETAILER'S SIGNATURE AUTHORISES RELEASE FOR PRODUCTION/INSTALLATION

Rev	REVISIONS TO ESTIMATE	Date

Rev	REVISIONS TO DRAWING	Date

TOLERANCES

OUR PRICES ARE BASED ON OPENINGS FOR WINDOWS BEING SUFFICIENTLY ACCURATE IN SIZE, POSITION, SQUARENESS AND STRAIGHTNESS TO ENABLE WINDOWS TO BE FIXED WITH A MAXIMUM 6mm CLEARANCE BETWEEN WINDOWS, FIXING BRACKETS AND BUILDERS WORK

LEGEND ON SPECIAL DETAILS

- External painting by CRITTALL/others
- A — ..... Dtuge by CRITTALL
  Holes by ~~General Contractor~~/CRITTALL
- B — ~~Polyurethane foam/intlerpr CRITTALL~~
- C — Polyurethane foam/waterproof cement (intl) NOT WITHIN CRITTALL SCOPE OF WORKS
- D — Brickwork etc. to be flush pointed 1mm 1½" forward of external face of windows
- Detail Number / Drawing Number

CRITTALL

Job Title: University of Sussex Falmer House

Contractor: Sussex Building Company

Architect:

VARIATIONS TO CONTRACT

Final approval of this drawing by the specifier will be deemed to accept payment liability for any item and/or cost variation in accordance with the contract

'BI-METALLIC CORROSION'

The content of this design has taken into consideration bi-metallic corrosion (Galvanic action) effects for the materials used therein and by following the advice given in PD 6484 : 1979.

© CRITTALL WINDOWS LTD. 2007

DRAWN: S.A. STRACEY	DATE: SEPT 10	
Examined by	SCALES 1:1	
EST./CONTRACT/DRWG No: 8935G2B	Sht. No: D5	ITEMS
Detailed by	Date	Dist.
Finish	File Region	

47

This drawing is the property of CRITTALL WINDOWS Ltd. It is a confidential document and must not be copied, used or its contents divulged without prior written consent.

DO NOT SCALE

OUTSIDE ELEVATIONS

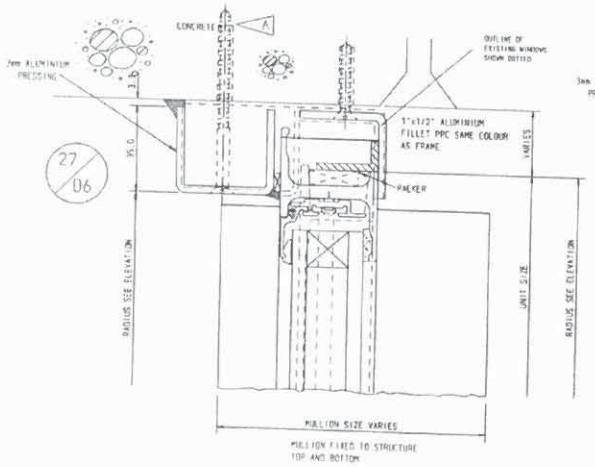

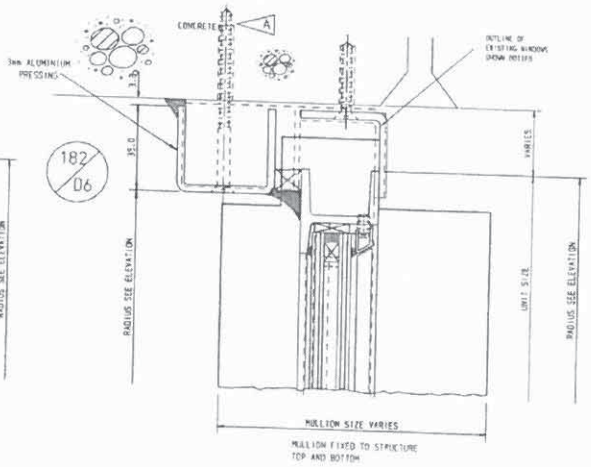

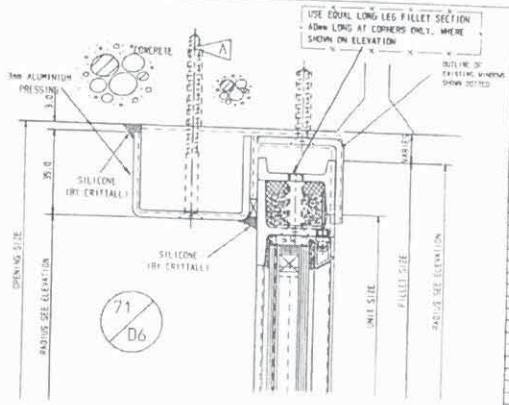

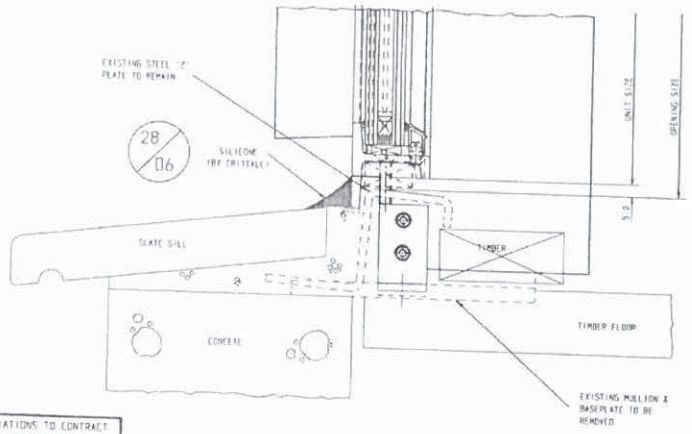

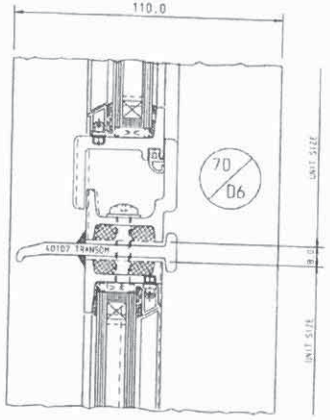

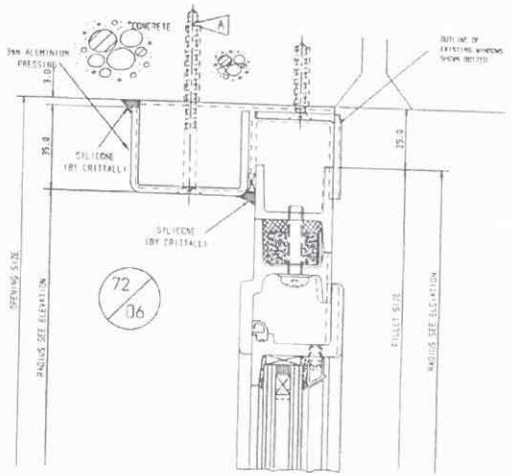

VARIATIONS TO CONTRACT

Final approval of this drawing by the specifier will be deemed to accept payment liability for any time and/or cost variation in accordance with the contract

"BI-METALLIC CORROSION"

The content of this design has taken into consideration bi-metallic corrosion (Galvanic action) effects for the materials used therein and by following the advice given in PD 6484 : 1979.

© CRITTALL WINDOWS Ltd. 2007

SPECIFICATION

● DETAILER'S SIGNATURE AUTHORISES RELEASE FOR PRODUCTION/FABRICATION

Rev	REVISIONS TO ESTIMATE	Date

Rev	REVISIONS TO DRAWING	Date
B	DETAILS 70 & 28 AMENDED	02.07.11
A	TRANSOMES AMENDED	25.10.10

TOLERANCES

OUR PRICES ARE BASED ON OPENINGS FOR WINDOWS BEING SUFFICIENTLY ACCURATE IN SIZE, POSITION, SQUARENESS AND STRAIGHTNESS TO ENABLE WINDOWS TO BE FIXED WITH A MAXIMUM 6mm CLEARANCE BETWEEN WINDOWS, FIXING BRACKETS AND BUILDERS WORK

LEGEND ON SPECIAL DETAILS

External painting by CRITTALL/others

A ..... attach by CRITTALL

B ..... fasteners by CRITTALL

C ~~Polyurethane foam seals by CRITTALL~~

D Polyurethane foam waterproof cement joint NOT WITHIN CRITTALL SCOPE OF WORKS

E Brickwork etc. to be flush within 12mm (1/2) forward of external face of window

Detail Number / Drawing Number

CRITTALL

Job Title: University of Sussex Falmer House

Contractor: Sussex Building Company

Architect:

DRAWN: S.A.STRACEY | DATE: OCT '10 | SCALES: 1:1

Examined by:

EST./CONTRACT/DRWG. No: 893562B | SHT. No: D6 | ITEMS:

Detail Numbers on Cert Letter: A B

Detail OO Issue No.

Detailed by: | Date: | Stat.

Finish: | Fix Register:

48

This drawing is the property of CRITTALL WINDOWS Ltd. It is a confidential document and must not be copied, used or its contents divulged without prior written consent.

DO NOT SCALE

OUTSIDE ELEVATIONS

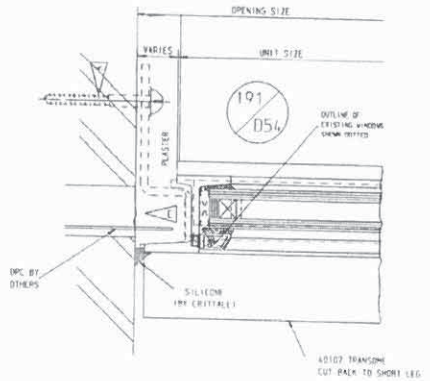

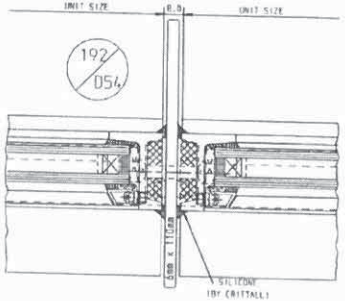

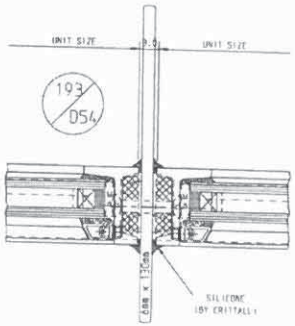

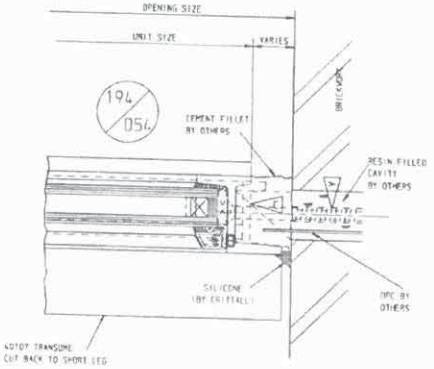

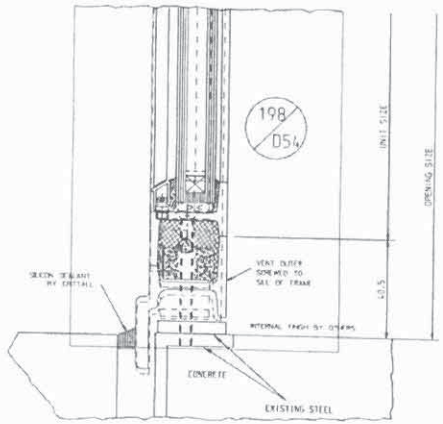

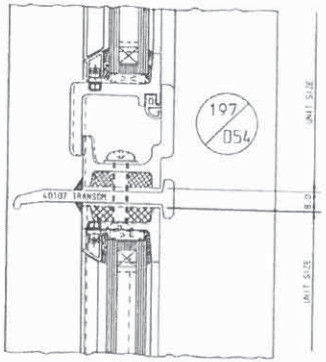

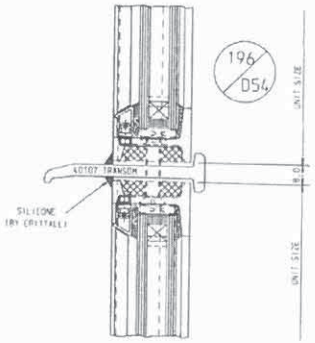

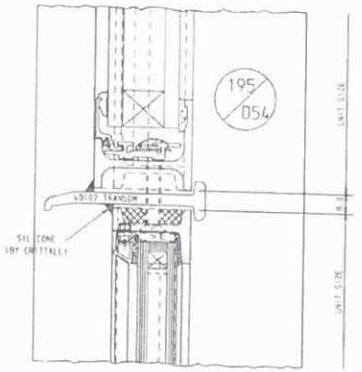

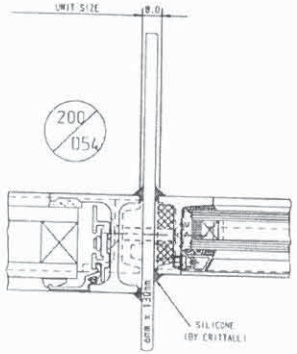

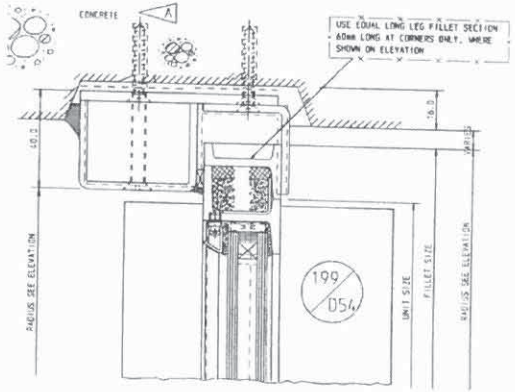

VARIATIONS TO CONTRACT
Final approval of this drawing by the specifier will be deemed to accept payment liability for any time and/or cost variation in accordance with the contract

'BI-METALLIC CORROSION'
The content of this design has taken into consideration Bi-metallic corrosion (Galvanic action) effects for the materials used therein and by following the advice given in PD 6484 : 1979.

© CRITTALL WINDOWS LTD. (2002)

SPECIFICATION

DETAILER'S SIGNATURE AUTHORISES RELEASE FOR PRODUCTION/INSTALLATION

Rev.	REVISIONS TO ESTIMATE	Date

Rev.	REVISIONS TO DRAWING	Date

TOLERANCES

OUR PRICES ARE BASED ON OPENINGS FOR WINDOWS BEING SUFFICIENTLY ACCURATE IN SIZE, POSITION, SQUARENESS AND STRAIGHTNESS TO ENABLE WINDOWS TO BE FIXED WITH A MAXIMUM 6MM CLEARANCE BETWEEN WINDOWS, FIXING BRACKETS AND BUILDERS WORK.

LEGEND ON SPECIAL DETAILS

- Externally painting by CRITTALL/others
- A — ..... finish by CRITTALL; holes by General contractor/CRITTALL
- B — Polyurethane foam infill by CRITTALL
- C — Polyurethane foam/waterproof cement infill NOT WITHIN CRITTALL SCOPE OF WORKS
- D — Brickwork etc. to be flush pointed 10mm (Ref) forward of external face of window
- Detail Number / Drawing Number

CRITTALL

Job Title: University of Sussex, Falmer House

Contractor: Sussex Building Company

Architect:

DRAWN S.A.STRACEY | DATE APRIL 2011

Examined by | SCALES 1:5

PST /CONTRACT/DRWG NO: 893562B | SHT. NO: 054 | ITEMS:

Format Impression / Last Issue | Date Last Issue | Detail OD Issue No.

Detailed by | Date | Dist.

Finish | Tile Region

This drawing is the property of CRITTALL WINDOWS Ltd. It is a confidential document and must not be copied, used or its contents divulged without prior written consent.

OUTSIDE ELEVATIONS

DO NOT SCALE

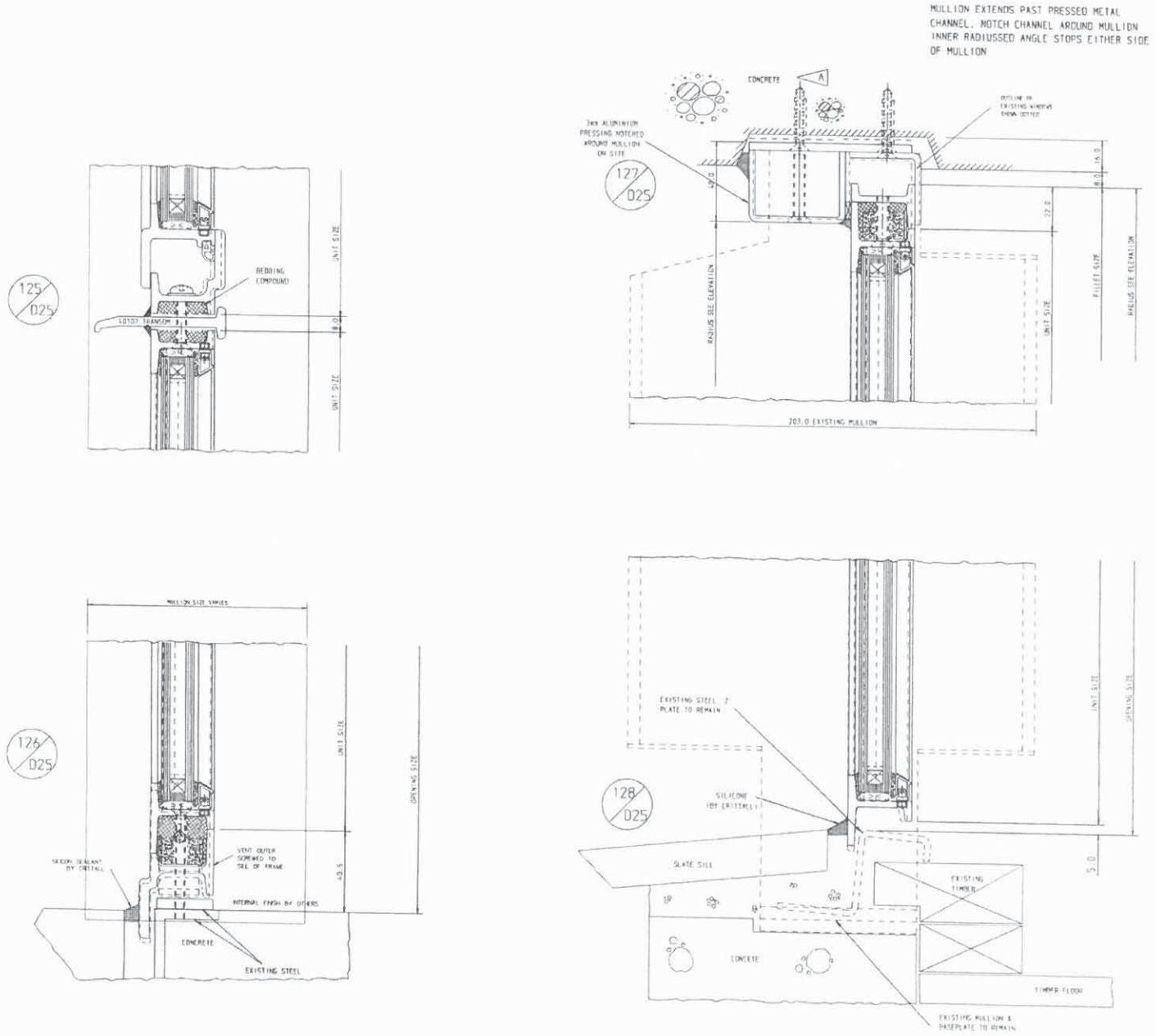

VARIATIONS TO CONTRACT

Final approval of this drawing by the specifier will be deemed to accept payment liability for any time and/or cost variation in accordance with the contract

'BI-METALLIC CORROSION'

The content of this design has taken into consideration bi-metallic corrosion (Galvanic action) effects for the materials used therein and by following the advice given in PD 6484 : 1979.

© CRITTALL WINDOWS LTD. (2007)

SPECIFICATION

● DETAILER'S SIGNATURE AUTHORISES RELEASE FOR PRODUCTION/INSTALLATION

Rev	REVISIONS TO ESTIMATE	Date
B	DETAILS AMENDED TO W20	21.02.11
A	DETAILS AMENDED	02.02.11

Rev	REVISIONS TO DRAWING	Date

TOLERANCES

OUR PRICES ARE BASED ON OPENINGS FOR WINDOWS BEING SUFFICIENTLY ACCURATE IN SIZE, POSITION, SQUARENESS AND STRAIGHTNESS TO ENABLE WINDOWS TO BE FIXED WITH A MAXIMUM 6mm CLEARANCE BETWEEN WINDOWS, FIXING BRACKETS AND BUILDERS WORK

LEGEND ON SPECIAL DETAILS

- External pointing by CRITTALL/others
- A ..... Plugs by CRITTALL
  Holes by General Contractor/CRITTALL
- B ~~Polyurethane foam infill by CRITTALL~~
- C Polyurethane foam/waterproof cement infill NOT WITHIN CRITTALL SCOPE OF WORKS
- D Br ckwork etc. to be flush pointed 12mm (½") forward of external face of windows
- Detail Number / Drawing Number

CRITTALL

Job Title: University of Sussex Falmer House

Contractor: Sussex Building Company

Architect:

DRAWN: S.A.STRACEY | DATE: OCT 10 | SCALES: 1:1

EST./CONTRACT/DRWG Nº	SHT.Nº	ITEMS
8935G2B	D25	

Detail Approved / Not Used Letter: A B

Detail DD Issue No.

Detailed by | Date | Dist.

Finish | Fix Region

This drawing is the property of CRITTALL WINDOWS Ltd. It is a confidential document and must not be copied, used or its contents divulged without prior written consent.

OUTSIDE ELEVATIONS

DO NOT SCALE

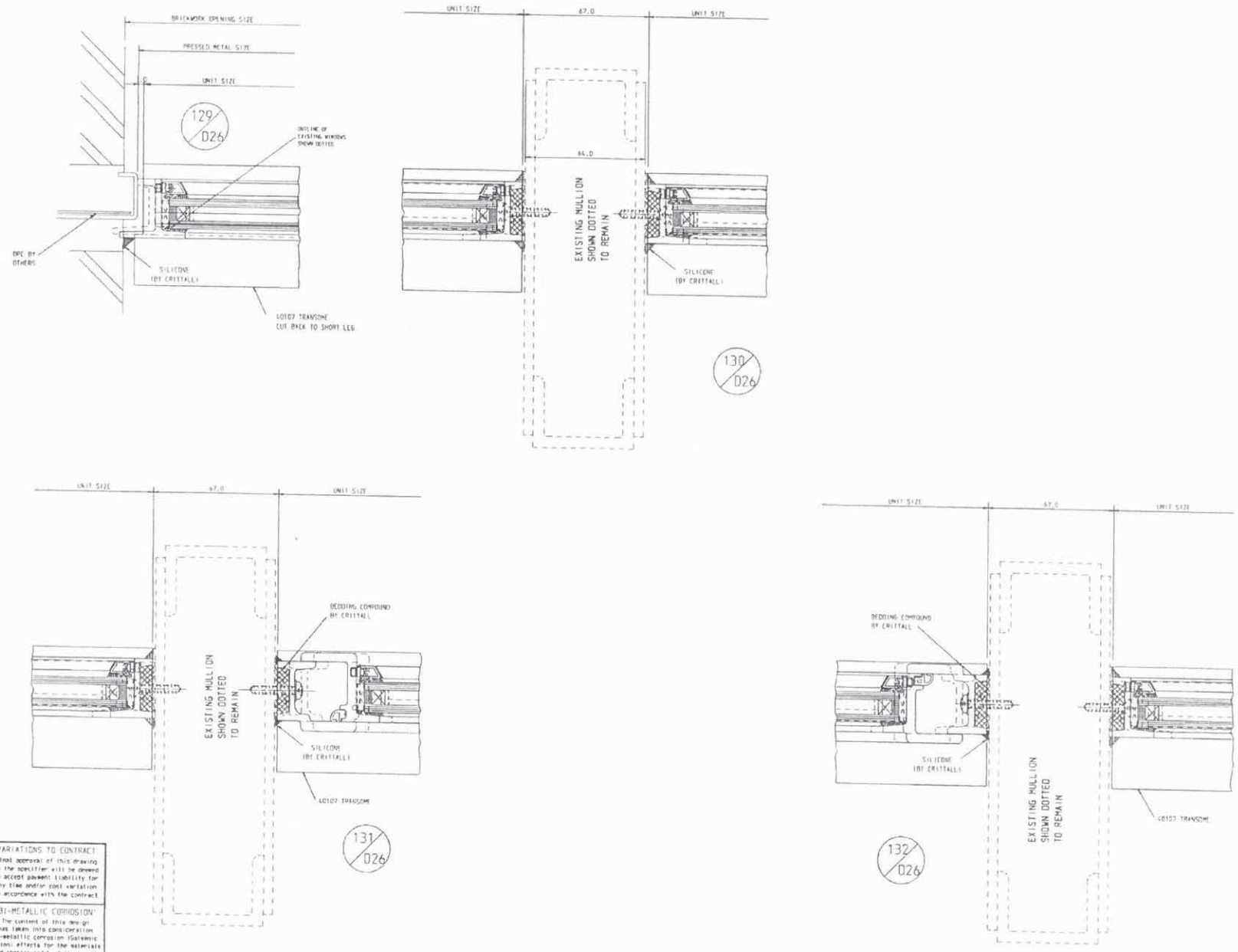

VARIATIONS TO CONTRACT

Final approval of this drawing by the specifier will be deemed to accept payment liability for any time and/or cost variation in accordance with the contract.

'BI-METALLIC CORROSION'

The content of this design has taken into consideration bi-metallic corrosion (Galvanic action) effects for the materials used therein and by following the advice given in PD 6484 : 1979.

© CRITTALL WINDOWS LTD. 2007

SPECIFICATION

* DETAILER'S SIGNATURE AUTHORISES RELEASE FOR PRODUCTION/INSTALLATION

Rev	REVISIONS TO ESTIMATE	Date
D	DETAILS AMENDED TO W20	21.02.11
A	DETAILS AMENDED	02.02.11

Rev	REVISIONS TO DRAWING	Date

TOLERANCES

OUR PRICES ARE BASED ON OPENINGS FOR WINDOWS BEING SUFFICIENTLY ACCURATE IN SIZE, POSITION, SQUARENESS AND STRAIGHTNESS TO ENABLE WINDOWS TO BE FIXED WITH A MAXIMUM 6mm CLEARANCE BETWEEN WINDOWS, FIXING BRACKETS AND BUILDERS WORK

LEGEND ON SPECIAL DETAILS

- External painting by CRITTALL/others
- A ..... Drilled by CRITTALL
  Holes by General Contractor/CRITTALL
- B ~~Polyurethane foam infill by CRITTALL~~
- C Polyurethane foam/waterproof cement infill NOT WITHIN CRITTALL SCOPE OF WORKS
- D Brickwork etc. to be flush pointed 12mm (1/2) forward of external face of windows
- Detail Number
- Drawing Number

CRITTALL

Job Title: University of Sussex Falmer House

Contractor: Sussex Building Company

Architect:

DRAWN: S.A.STRACEY | DATE: SEPT 10

Examined by: | SCALES: 1:1

EST./CONTRACT/DRWG. Nº: 8935G2B | Sht. Nº: D26 | ITEMS:

Detail Number / Cost Center: A B

Detail DD Issue No.

Detailed by: | Date: | Dist.:

Finish: | Fix Region:

This drawing is the property of CRITTALL WINDOWS Ltd. It is a confidential document and must not be copied, used or its contents divulged without prior written consent.

DO NOT SCALE

OUTSIDE ELEVATIONS

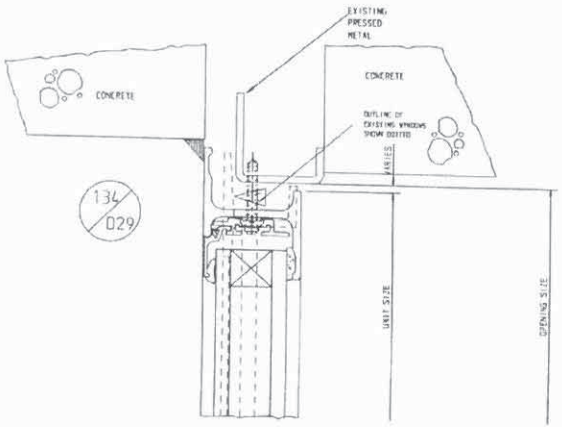

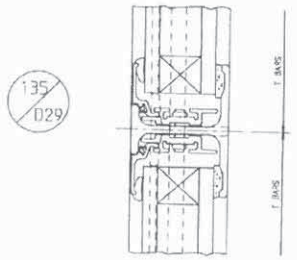

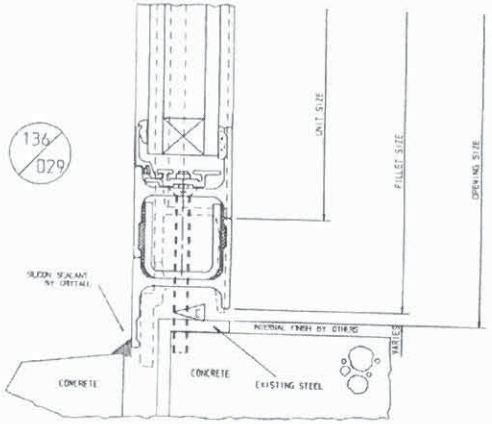

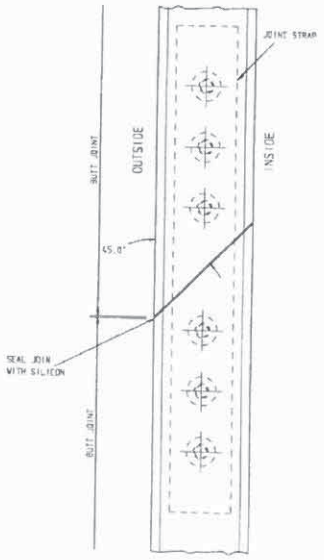

BUTT JOINT DETAIL

100x 25x6mm JOINT STRAP
FIXED WITH 6No. M6x12 CS'K SCREWS

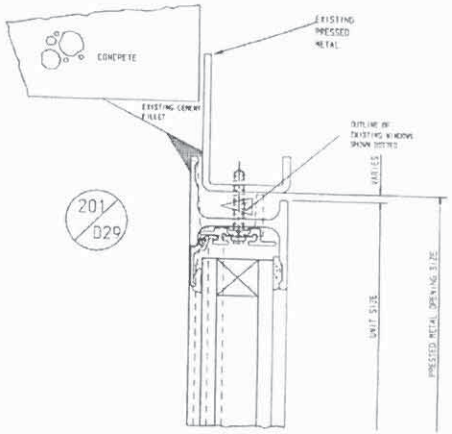

VARIATIONS TO CONTRACT

Final approval of this drawing by the specifier will be deemed to accept payment liability for any time and/or cost variation in accordance with the contract

'BI-METALLIC CORROSION'

The content of this design has taken into consideration bi-metallic corrosion (galvanic action) effects for the materials used therein and by following the advice given in PD 6484 : 1979.

© CRITTALL WINDOWS LTD. 2009

* DETAILER'S SIGNATURE AUTHORISES RELEASE FOR PRODUCTION/INSTALLATION

Rev.	REVISIONS TO ESTIMATE	Date

Rev.	REVISIONS TO DRAWING	Date
A	DETAIL 201 ADDED	30.06.11

TOLERANCES

OUR PRICES ARE BASED ON OPENINGS FOR WINDOWS BEING SUFFICIENTLY ACCURATE IN SIZE, POSITION, SQUARENESS AND STRAIGHTNESS TO ENABLE WINDOWS TO BE FIXED WITH A MAXIMUM 6mm CLEARANCE BETWEEN WINDOWS, FIXING BRACKETS AND BUILDERS WORK

LEGEND ON SPECIAL DETAILS

- External painting by CRITTALL/others
- A ..... driven by CRITTALL
- Holes by General Contractor (CRITTALL)
- B ~~Polyurethane foam infill by CRITTALL~~
- C Polyurethane foam/waterproof cement infill NOT WITHIN CRITTALL SCOPE OF WORKS
- D Brickwork etc. to be 15mm (either 10mm (in) forward of external face of window
- Detail Number / Drawing Number

CRITTALL

Job Title: University of Sussex Falmer House

Contractor: Sussex Building Company

Architect:

Drawn: S.A.STRALEY	DATE: OCT 10
Traced by:	SCALES: 1:1
EST./CONTRACT/DRWG. No: 893528	SHT. No: 029
Latest Number/ Letter Letter:	A
Detail OR Issue No.	
Detailed by:	Date:
Finish:	Fix Height:

This drawing is the property of CRITTALL WINDOWS Ltd. It is a confidential document and must not be copied, used or its contents divulged without prior written consent.

OUTSIDE ELEVATIONS

DO NOT SCALE

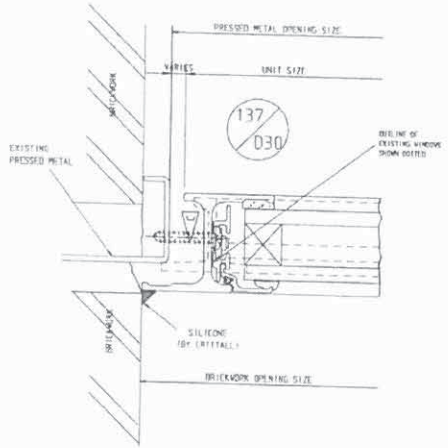

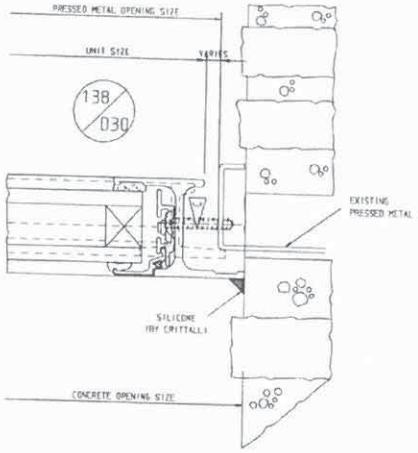

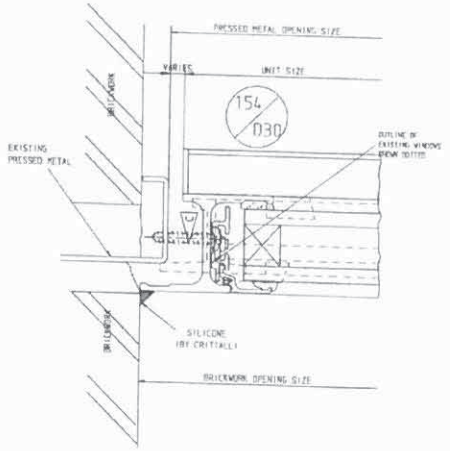

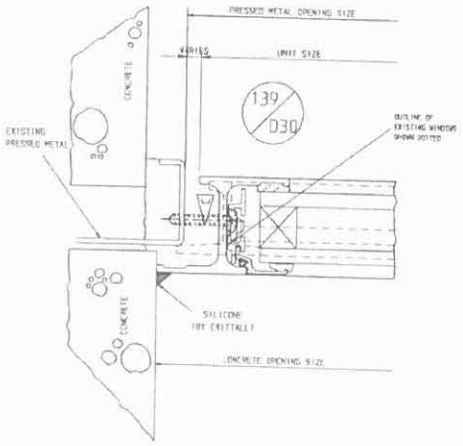

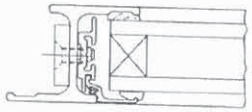

BUTT JOINT DETAIL

100x 25x6mm JOINT STRAP
FIXED WITH 6No. M6x12 CS'K SCREWS

VARIATIONS TO CONTRACT

Final approval of this drawing by the specifier will be deemed to accept payment liability for any time and/or cost variation in accordance with the contract

BI-METALLIC CORROSION

The content of this design has taken into consideration bi-metallic corrosion (Galvanic action) effects for the materials used therein and by following the advice given in PD 6484 : 1979.

© CRITTALL WINDOWS LTD. 2007

SPECIFICATION

* DETAILER'S SIGNATURE AUTHORISES RELEASE FOR PRODUCTION/INSTALLATION

Rev	REVISIONS TO ESTIMATE	Date
A	DETAIL 154 ADDED	05.11.10

Rev	REVISIONS TO DRAWING	Date

TOLERANCES

OUR PRICES ARE BASED ON OPENINGS FOR WINDOWS BEING SUFFICIENTLY ACCURATE IN SIZE, POSITION, SQUARENESS AND STRAIGHTNESS TO ENABLE WINDOWS TO BE FIXED WITH A MAXIMUM 6mm CLEARANCE BETWEEN WINDOWS, FIXING BRACKETS AND BUILDERS WORK

LEGEND ON SPECIAL DETAILS

- External painting by CRITTALL/others
- A — ..... plugs by CRITTALL
  Holes by ~~General Contractor~~/CRITTALL
- B — ~~Polyurethane foam~~ infill by CRITTALL
- C — Polyurethane foam/waterproof cement infill NOT WITHIN CRITTALL SCOPE OF WORKS
- D — Brickwork etc. to be flush painted 15mm (3/4") forward of external face of windows
- Detail Number / Drawing Number

CRITTALL

Job Title: University of Sussex Falmer House

Contractor: Sussex Building Company

Architect:

DRAWN: S.A.STRACEY | DATE: OCT 10

Examined by: | SCALES: 1:1

EST./CONTRACT/DRVG.No: 8935G2B | Shtr.No: D30 | ITEMS:

Latest Revision on Last Letter: A

Detail CD Issue No.

Detailed by: | Date: | Dist.

Design: | File Region:

This drawing is the property of CRITTALL WINDOWS Ltd. It is a confidential document and must not be copied, used or its contents divulged without prior written consent.

OUTSIDE ELEVATIONS

DO NOT SCALE

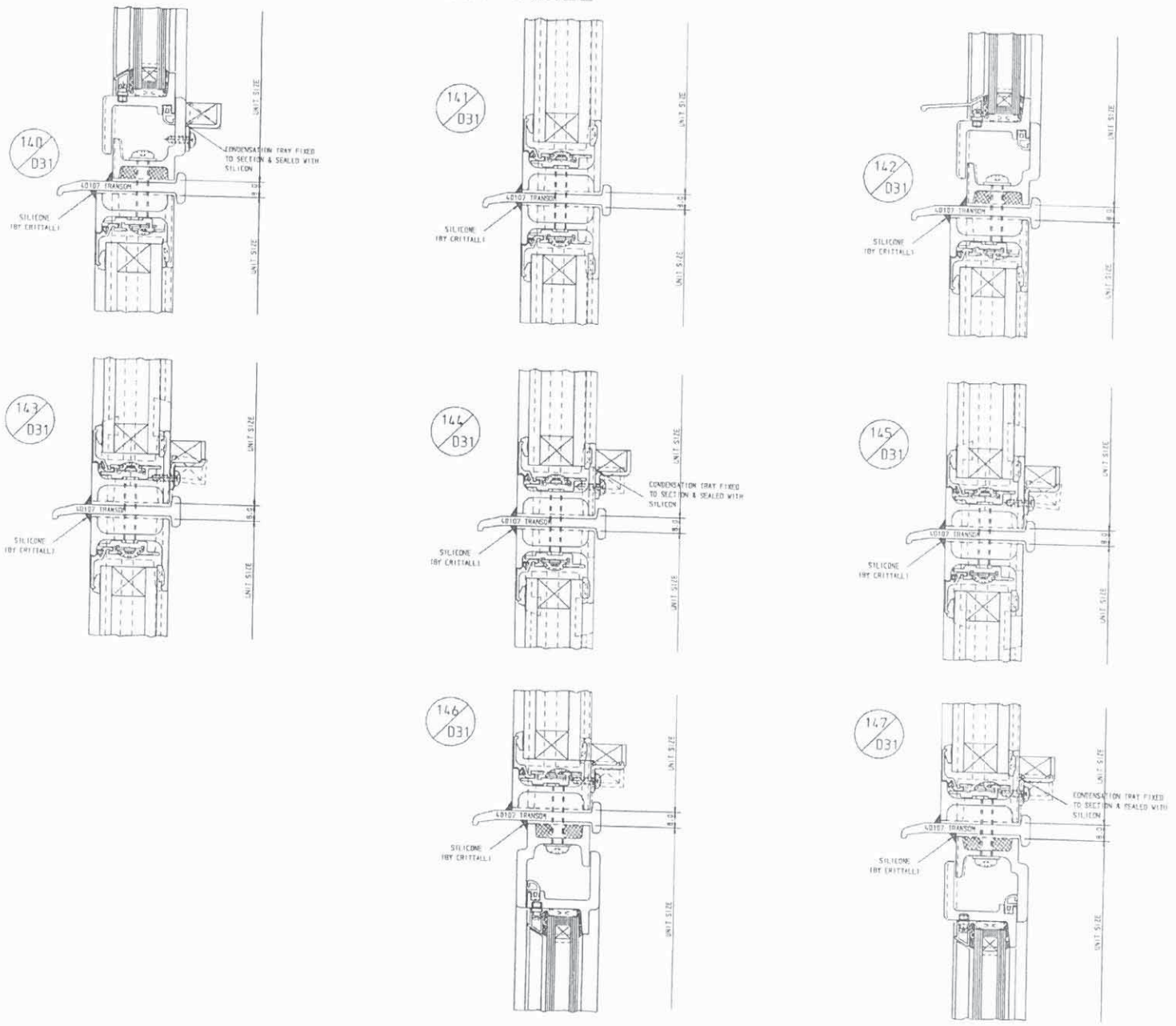

SPECIFICATION

* DETAILER'S SIGNATURE AUTHORISES RELEASE FOR PRODUCTION/INSTALLATION

Rev	REVISIONS TO ESTIMATE	Date

Rev	REVISIONS TO DRAWING	Date

TOLERANCES

OUR PRICES ARE BASED ON OPENINGS FOR WINDOWS BEING SUFFICIENTLY ACCURATE IN SIZE, POSITION, SQUARENESS AND STRAIGHTNESS TO ENABLE WINDOWS TO BE FIXED WITH A MAXIMUM 6mm CLEARANCE BETWEEN WINDOWS, FIXING BRACKETS AND BUILDERS WORK

LEGEND ON SPECIAL DETAILS

- External painting by CRITTALL/others
- A ..... plugs by CRITTALL
- Holes by ~~General Contractor~~ CRITTALL
- B ~~Polyurethane foam infill by CRITTALL~~
- C Polyurethane foam/waterproof cement infill NOT WITHIN CRITTALL SCOPE OF WORKS
- D Reliveers etc. to be flush painted 12mm 12x7 forward of external face of windows
- Detail Number / Drawing number

CRITTALL

Job Title: University of Sussex Falmer House

Contractor: Sussex Building Company

Architect:

DRAWN: S.A.STRACEY | DATE: NOV 10

Examined by: | SCALES: 1:1

EST./CONTRACT/DRWG.Nº: 8935G2B | SHT.Nº: D31 | ITEMS:

Detail DD Issue No.

Detailed by: | Date: | Dist.

Fixing: | Fix Region:

VARIATIONS TO CONTRACT

Final approval of this drawing by the specifier will be deemed to accept payment liability for any time and/or cost variation in accordance with the contract

'BI-METALLIC CORROSION'

The content of this design has taken into consideration bi-metallic corrosion (Galvanic action) effects for the materials used therein and by following the advice given in PD 6484 : 1979.

© CRITTALL WINDOWS LTD. 2007

54

This drawing is the property of CRITTALL WINDOWS Ltd. It is a confidential document and must not be copied, used or its contents divulged without prior written consent.

OUTSIDE ELEVATIONS

DO NOT SCALE

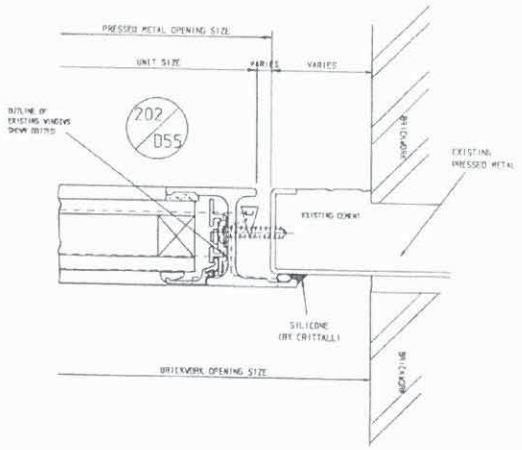

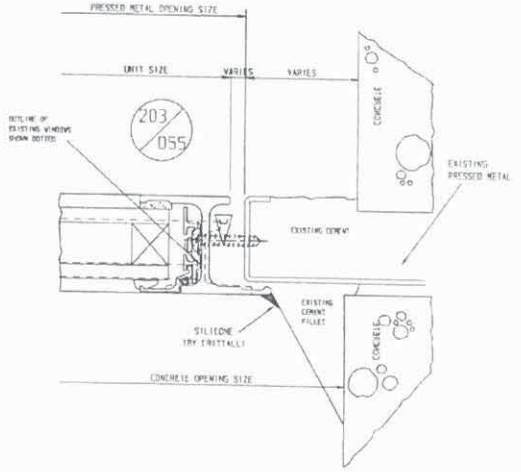

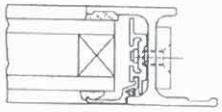

BUTT JOINT DETAIL

100x 25x6mm JOINT STRAP
FIXED WITH 6No. M6x12 CS'K SCREWS

SPECIFICATION

* DETAILER'S SIGNATURE AUTHORISES RELEASE FOR PRODUCTION/INSTALLATION

Rev	REVISIONS TO ESTIMATE	Date

Rev	REVISIONS TO DRAWING	Date

TOLERANCES

OUR PRICES ARE BASED ON OPENINGS FOR WINDOWS BEING SUFFICIENTLY ACCURATE IN SIZE, POSITION, SQUARENESS AND STRAIGHTNESS TO ENABLE WINDOWS TO BE FIXED WITH A MAXIMUM 6mm CLEARANCE BETWEEN WINDOWS, FIXING BRACKETS AND BUILDERS WORK

LEGEND ON SPECIAL DETAILS

External painting by CRITTALL/others
A ..... plugs by CRITTALL
Rates by ~~General Contractor~~/CRITTALL
B ~~Polyurethane foam infill by CRITTALL~~
C Polyurethane foam/waterproof cement infill NOT WITHIN CRITTALL SCOPE OF WORKS
D Brickwork etc. to be flush painted 12mm (1/2") forward of external face of windows
Detail Number
Drawing Number

CRITTALL

Job Title
University of Sussex
Falmer House

Contractor
Sussex Building Company

Architect

DRAWN S.A.STRACEY	DATE JUNE 11
Examined by	SCALES 1:1

EST./CONTRACT/DRWG. Nº	SHT. NO.	ITEMS
8935G2B	D55	

Latest Amendment
Detail Letter
Detail DC Issue No.

Detailed by	Date	Dist.
Finish	Fix Region	

VARIATIONS TO CONTRACT
Final approval of this drawing by the specifier will be deemed to accept payment liability for any time and/or cost variation in accordance with the contract

"BI-METALLIC CORROSION"
The content of this design has taken into consideration bi-metallic corrosion (Galvanic action) effects for the materials used therein and by following the advice given in PD 6484 : 1979.

© CRITTALL WINDOWS LTD. 2007

55

E3 Detailing of external handrails LBHPA2A5

E3.1 Applies to the Pevensey 1 Building and the Shawcross Building

E3.2 In line with condition 3 of LBHPA2A5, any new handrails should be in accordance with previously approved plans, a typical detail of which is shown in drawing Nos.: GA.D.001, 002, 003 (All Rev A) and included here for ease of reference.

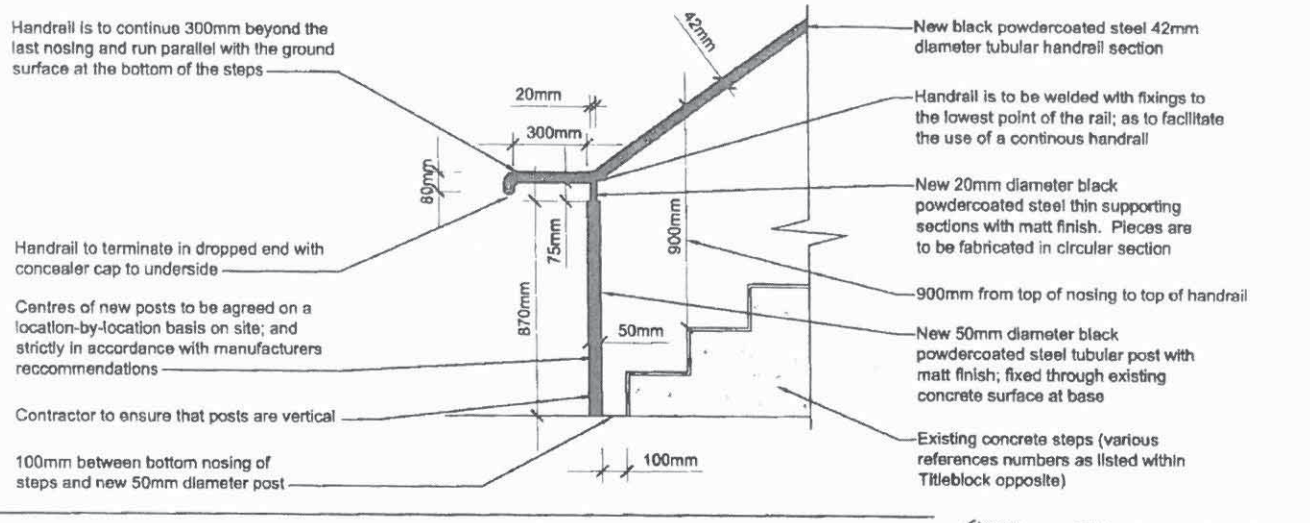

TYPICAL POST FIXED HANDRAIL DETAIL - AT BOTTOM NOSING
1:20

0mm 500mm 1,000mm

SCALE BAR @ 1:20 - A3

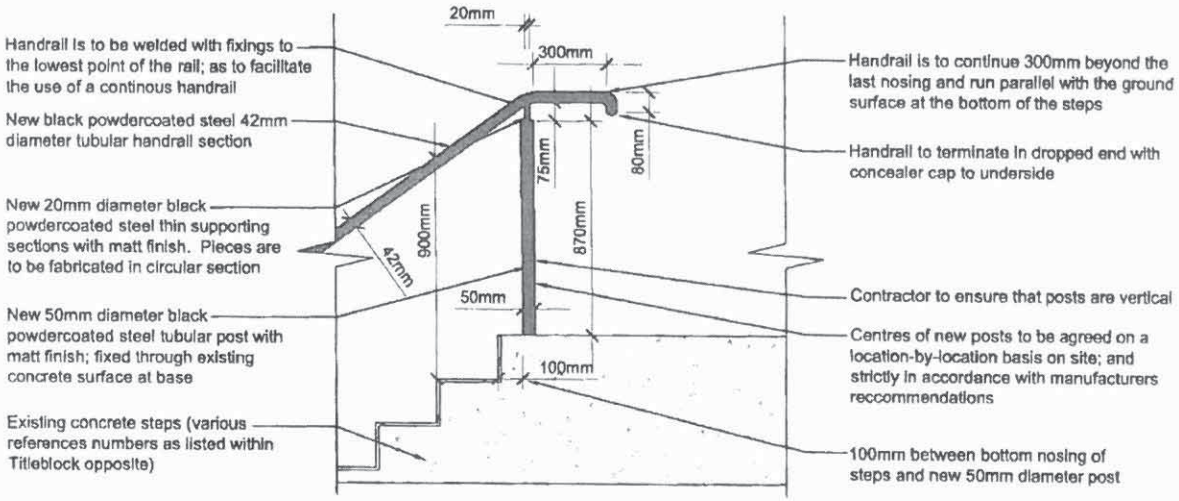

TYPICAL POST FIXED HANDRAIL DETAIL - AT TOP NOSING
1:20

DO NOT SCALE FROM THIS DRAWING. Use figured dimensions only and all dimensions to be verified on site, any discrepancy reported immediately.

This drawing has been produced for the specific client and project identified below and is not intended for use by any other persons or for any other purpose. © MacConvilles Surveying.

This drawing is to be read in conjunction with all other related drawings and documentation.

Details are representative only, final setting out to be verified on site.

Electrical, Mechanical and Structural layouts are indicative only, refer to Electrical, Mechanical and Structural drawings for layout details and calculations.

TO BE READ IN CONJUNCTION WITH THE LATEST REVISIONS OF THE FOLLOWING

LOCATION PLANS

GA.P.001 - Handrail Location Plan - Sheet One
GA.P.002 - Handrail Location Plan - Sheet Two
GA.P.003 - Handrail Location Plan - Sheet Three

DETAILS

GA.D.002 - Typical Wall Mounted Handrail Detail
GA.D.003 - Typical Post Fixed Handrail Detail to Retaining Wall

APPLICABLE HANDRAIL LOCATION REFERENCES

From Handrail Location Plan Sheet One

Nr's 1, 4, 5, 6, 8, 9, 10, 11, 12, 13, 14, 15

From Handrail Location Plan Sheet Two

Nr's 16, 17, 18, 19, 20, 21, 22, 23, 24, 25, 26, 27, 28, 29, 30, 31, 32, 33, 34, 35

From Handrail Location Plan Sheet Three

Nr's 36, 37, 38, 39, 40, 41, 42, 43, 44, 45, 46, 47, 48, 49, 50, 51, 52, 53, 54, 55, 56

RECEIVED

Rev	Revision details	Drwn	Chkd	Date
A	Note added to drawing	SV	DR	11.03.09

FEASIBILITY		BUILDING CONTROL	
DESIGN		TENDER	
BILLING		CONSTRUCTION	
PLANNING	X	AS BUILT	

	Name	Date
Drawn:	SV	18/02/09
Checked:		

MacConvilles
BUILT ENVIRONMENT CONSULTANTS
Surveying

Shaftesbury Court
96 Dyke Road
BRIGHTON
East Sussex
BN1 4ST
T +44 (0) 1273 692611
F +44 (0) 1273 676676
E mail@macconvilles.com
W www.macconvilles.com

Client
University of Sussex

Project Title
Handrail Installation
Various Sites
University of Sussex Campus

Drawing Title
Handrail Details
Sheet One
Typical Post Fixed Handrail Detail

Drawing No	Scale @ A3	Rev
GA.D.001	**1:20**	**A**

54

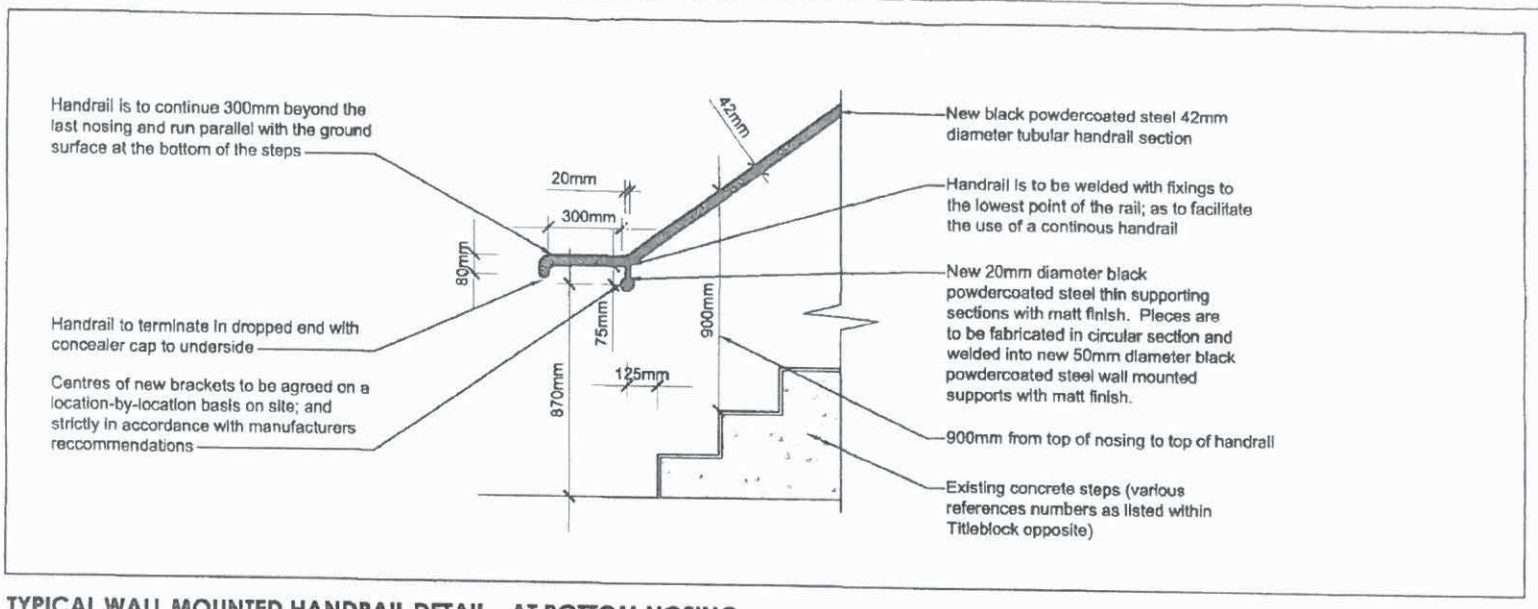

TYPICAL WALL MOUNTED HANDRAIL DETAIL - AT BOTTOM NOSING

1:20

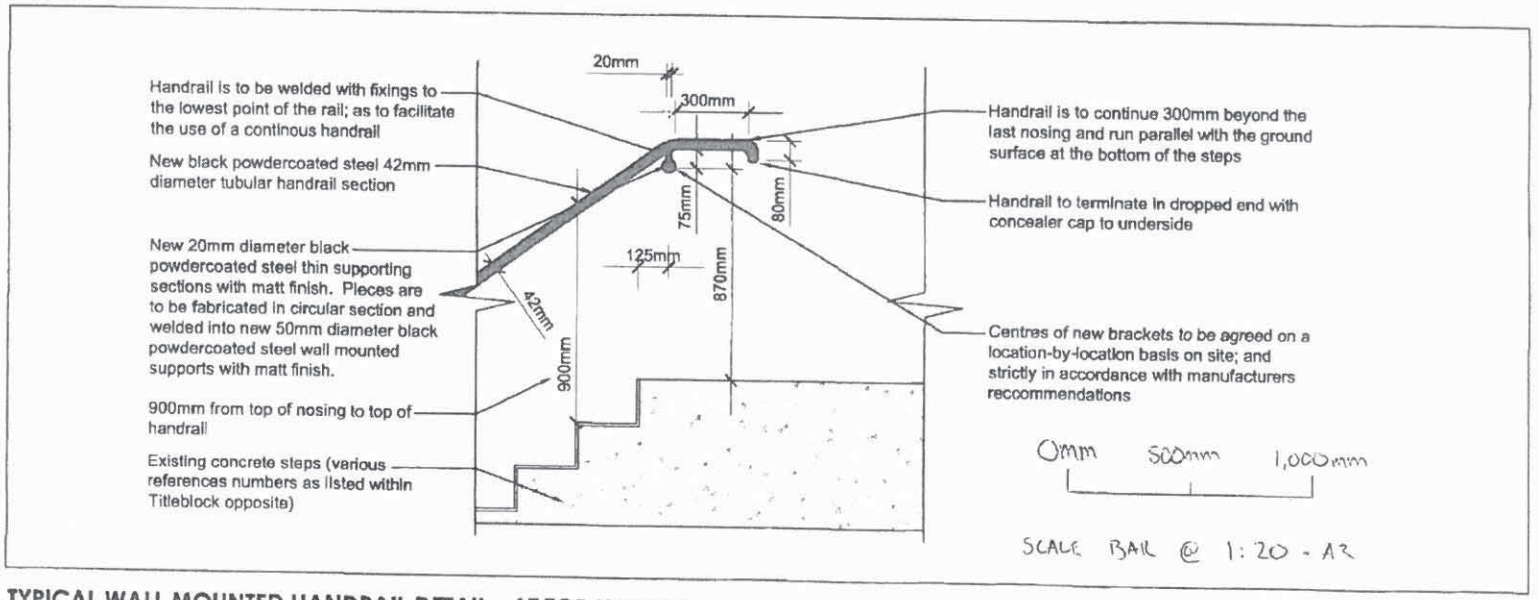

TYPICAL WALL MOUNTED HANDRAIL DETAIL - AT TOP NOSING

1:20

DO NOT SCALE FROM THIS DRAWING. Use figured dimensions only and all dimensions to be verified on site, any discrepancy reported immediately.

This drawing has been produced for the specific client and project identified below and is not intended for use by any other person or for any other purpose. © Macconvilles Surveying.

This drawing is to be read in conjunction with all other related drawings and documentation.

Details are representative only, final setting out to be verified on site.

Electrical, Mechanical and Structural layouts are indicative only, refer to Electrical, Mechanical and Structural drawings for layout details and calculations.

TO BE READ IN CONJUNCTION WITH THE LATEST REVISION OF THE FOLLOWING:

LOCATION PLANS:

GA.P.001 - Handrail Location Plan - Sheet One
GA.P.002 - Handrail Location Plan - Sheet Two
GA.P.003 - Handrail Location Plan - Sheet Three

DETAILS:

GA.D.001 - Typical Post Fixed Handrail Detail
GA.D.003 - Typical Post Fixed Handrail Detail to Retaining Wall

APPLICABLE HANDRAIL LOCATION REFERENCES

From Handrail Location Plan Sheet One

No's 7 & 8

From Handrail Location Plan Sheet Two

NONE

From Handrail Location Plan Sheet Three

NONE

RECEIVED

Rev	Revision details	Drwn	Chkd	Date
A	Drawings notes amended	SV	DB	11-03-09

FEASIBILITY		BUILDING CONTROL	
DESIGN		TENDER	
BILLING		CONSTRUCTION	
PLANNING	X	AS BUILT	

	Name	Date
Drawn:	SV	15/02/09
Checked:		

MacConvilles
BUILT ENVIRONMENT CONSULTANTS
Surveying

Shaftesbury Court
95 Ditchling Road
BRIGHTON
East Sussex
BN1 4ST
T +44 (0) 1273 692811
F +44 (0) 1273 676839
E mail@macconvilles.com
W www.macconvilles.com

Client
University of Sussex

Project Title
Handrail Installation
Various Sites
University of Sussex Campus

Drawing Title
Handrail Details
Sheet Two
Typical Wall Mounted Handrail Detail

Drawing No	Scale @ A3	Rev
GA.D.002	1:20	A

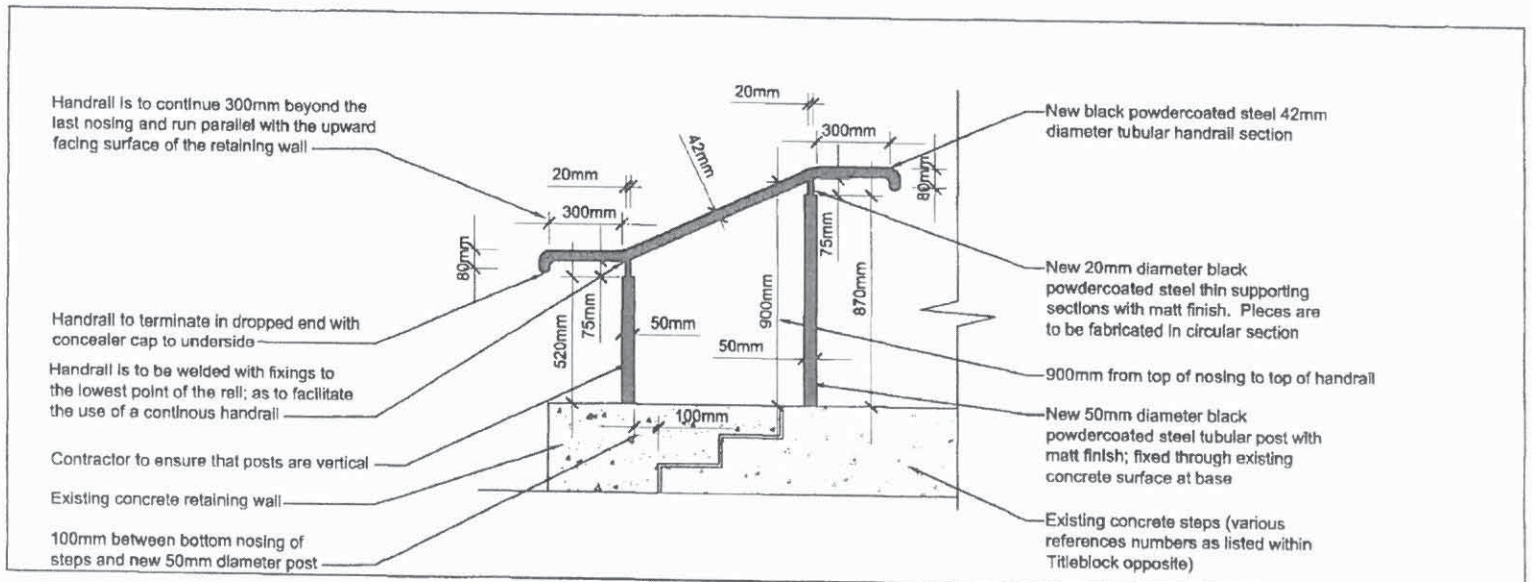

TYPICAL POST FIXED HANDRAIL DETAIL OVER RETAINING WALL

1:20

0mm 500mm 1,000mm

SCALE BAR @ 1:20 - A3

DO NOT SCALE FROM THIS DRAWING. Use figured dimensions only and all dimensions to be verified on site, any discrepancy reported immediately.

This drawing has been produced for the specific client and project identified below and is not intended for use by any other person or for any other purpose. © MacConvilles Surveying.

This drawing is to be read in conjunction with all other related drawings and documentation.

Details are representative only, final setting out to be verified on site.

Electrical, Mechanical and Structural layouts are indicative only, refer to Electrical, Mechanical and Structural drawings for layout details and calculations.

TO BE READ IN CONJUNCTION WITH THE LATEST REVISION OF THE FOLLOWING

LOCATION PLANS:

GA.P.001 - Handrail Location Plan - Sheet One
GA.P.002 - Handrail Location Plan - Sheet Two
GA.P.003 - Handrail Location Plan - Sheet Three

DETAILS:

GA.D.001 - Typical Post Fixed Handrail Detail
GA.D.002 - Typical Wall Mounted Handrail Detail

APPLICABLE HANDRAIL LOCATION REFERENCES

From Handrail Location Plan Sheet One

Nos 2 & 3

From Handrail Location Plan Sheet Two

NONE

From Handrail Location Plan Sheet Three

NONE

RECEIVED

Rev	Revision details	Drwn	Chkd	Date
A	Note added to drawing	SV	DB	11-03-09

FEASIBILITY		BUILDING CONTROL	
DESIGN		TENDER	
BILLING		CONSTRUCTION	
PLANNING	X	AS BUILT	

	Name	Date
Drawn:	SV	16/02/09
Checked:		

MacConvilles
BUILT ENVIRONMENT CONSULTANTS
Surveying

Shaftesbury Court
86 Ditchling Road
BRIGHTON
East Sussex
BN1 4ST
T +44 (0) 1273 [illegible]
F +44 (0) 1273 [illegible]
E mail@macconvilles.com
W www.macconvilles.com

Client

University of Sussex

Project Title

Handrail Installation
Various Sites
University of Sussex Campus

Drawing Title

Handrail Details
Sheet Three
Typical Post Fixed Handrail Detail
Over Retaining Wall

Drawing No	Scale @ A3	Rev
GA.D.003	1:20	A

59

E4 Detailing of safety works on internal handrails and balustrades LBHPA2A6

E4.1 Applies to Arts A and B, the Chichester 1 Building, Falmer House, the Pevensey 1 Building and the Shawcross Building

E4.2 Works are to be carried out in a manner to match previously approved schemes and shown as executed in the photographs below.

PROPOSED VAMONT OF CABLE ARREST SYSTEM

roofsafe
anchors

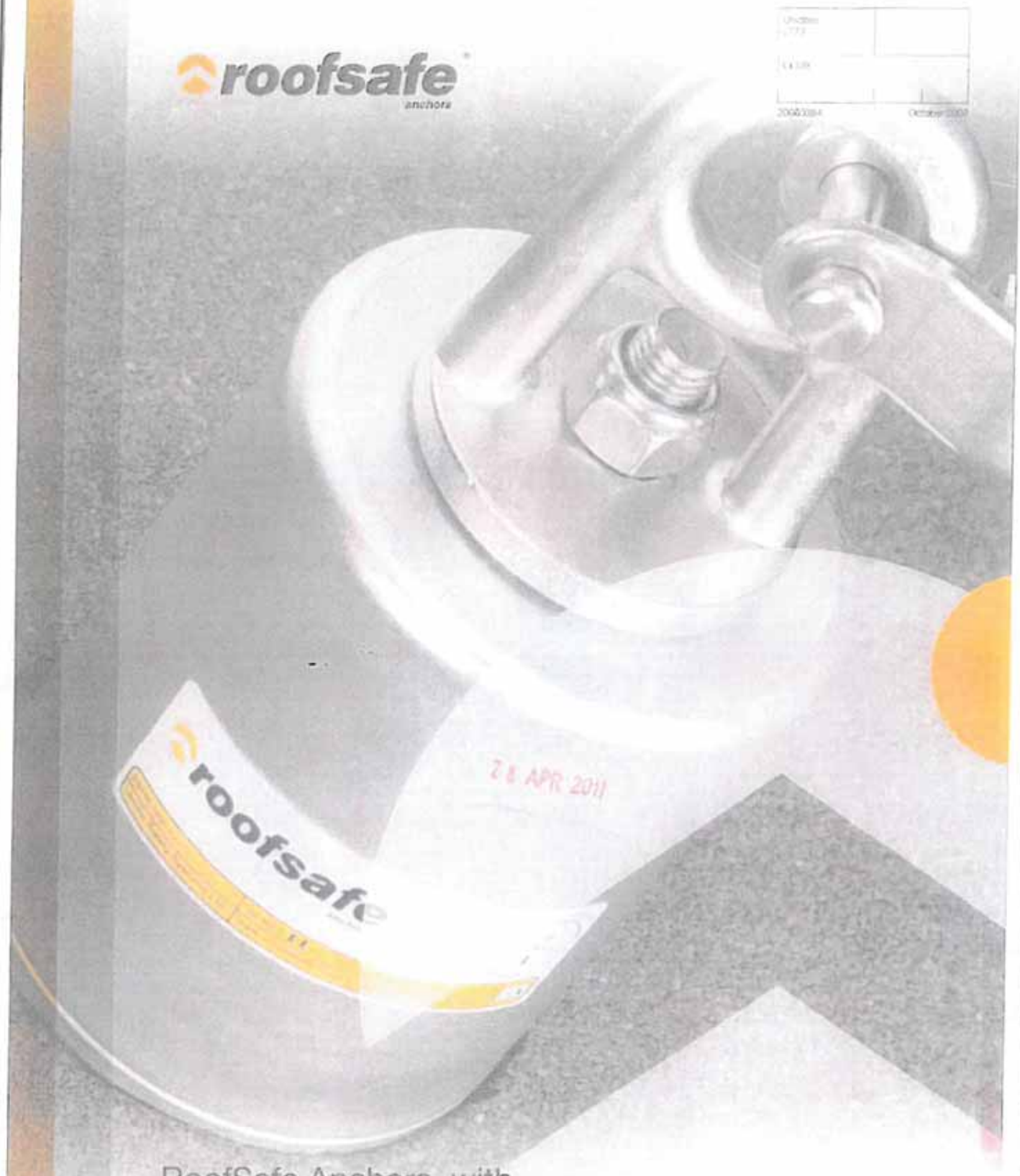

2 8 APR 2011

RoofSafe Anchors, with Force Management Technology for Bituminous, Mineral Felt and other Membrane Roof Systems

uniline
safety systems

roofsafe
anchors

RoofSafe Anchors, with Force Management technology for bituminous, mineral felt and other membrane roof systems

force
management technology

working safely at heights	02
force management systems	03
anchor installation	03
structural validation	04
anchor construction	04
installation detail	05
green roof systems	05
system design parameters	05
performance tested	06
system integration	06

for more information about our range of equipment visit our website at

28 APR 2011

working safely at heights

Roof work can be a hazardous and high risk activity. The risks can be mitigated and effectively controlled by using a fall protection system in conjunction with management controls and training.

Unilne Safety Systems are experts in their field and provide sound advice to assist you in making a well informed safety decision that will reduce the chances of avoidable workplace accidents.

how it works

Unilne's technically superior RoofSafe Anchors permit many metal decks, plywood and concrete roof constructions to be used as structural anchors by limiting the forces that are generated in the event of a fall to less than 10kN (2,250lbs) through a built in energy absorber.

Built in energy absorbing elements are particularly beneficial in top tie safety anchors as they enable energy to be absorbed throughout the entire fall protection system. This is especially important in short systems and systems with corners, as loads in these cases can be very high and beyond the tolerance of the roof system. Roof anchors which do not incorporate energy absorbing elements, have limited use as anchor devices on metal roof systems.

The reaction of the RoofSafe Anchor in the event of a fall re-orientates the load to a more beneficial plane for the roof structure, before deployment of the energy absorber reduces the fall energy and distributes load through the fixings, ensuring the safe arrest of the worker, or workers.

bituminous, mineral felt membrane and roof systems

anchor installation

The anchor can be fitted to metal decking, plywood or concrete roof constructions from the top of the roof using M8 toggle clamps, mechanical fixings or stud, provided with anti-compression spacers. The length of the toggle bolt can be increased to allow for use in constructions with deep insulation. The number and size of the toggle clamps/stud have been calculated to counter the overturning moment applied by the anchor in the first stage of activation and resist the shear load in the second stage of activation when the energy absorber deploys. When using stud and chemical resin to secure the anchor, it is important to follow the manufacturers specification and installation guidance.

structural validation

anchor construction

Anchors are constructed from mild steel and have a protective corrosion resistant coating. The roof membrane can be bonded directly to the base plates and casing thereby providing a neat waterproofing detail, or alternatively, for Mineral Felt Roofs, Uniline can provide a pre-engineered weather proofing detail to simplify the waterproofing process and ensure the anchor has long term resistance to water ingress.

Only approved waterproofing details should be used and detailing work must be carried out by an authorised roofing contractor. Base plates are completely flat to make sealing easier and have recessed fixing points to protect the roof membrane from becoming damaged.

Very importantly, no elements of the anchor are exposed to the environment after installation, ensuring long-term corrosion resistance and anchor performance.

Integrating Uniline's cable safety systems into your building is made easy and trouble free with Uniline's range of patented RoofSafe Anchors with Force Management technology.

The design of the anchor is neat and unobtrusive, limiting any visual impact to the building.

type of roof this anchor can be used on:

typical installation detail

The anchors shown above are used for integrating Uniline's cable fall protection systems on to your building, thereby facilitating safe access

Type A End Anchors
Type B Corner Anchors
Type C Variable Anchors
Type D Intermediate Anchors

The Type D anchor may also be used as a single point anchor. (EN795 class A2)

Due to the very large number of roof profiles available in the market place Uniline carries a wide range of standard stock sizes and can also produce special sizes on request and following validation of the roofing system

For further information, please contact Uniline's Technical Department.

green roof systems

Use of Uniline's pre-engineered weather proofing detail enables the anchor to be used in conjunction with Green Roofing Systems

The sedum element of the roof construction can be installed around the anchor without any fear of water penetration through the sealing detail

system design parameters

RoofSafe Anchors can be used with RoofSafe Cable systems to provide cost effective and functional safety access solutions

Design requirements for the anchors are:

RoofSafe Cable 12m (39.37ft) maximum span (systems less than 12m (39.37ft) must have at least one intermediate anchor)

RoofSafe Cable provides continuous hands free access for the user of the system

System designs must be calculated using Uniline for Windows software in order to ensure that the proposed layout can support the number of workers intended to use the system in the future. Furthermore the software will advise on the ground clearance required beneath the work area in order to safely arrest a fall

Uniline provide technical drawings and specification details to help Architects and Building Safety Engineer's with the inclusion of its products in building specification documents and tenders, no matter how complex your requirements may appear. Local design support can be provided by our network of System Integration Specialists.

performance tested

RoofSafe Anchors are tested to exceed the standards of EN795, are CE marked and come with a 10 Year Guarantee for performance and corrosion resistance. (Subject to terms and conditions).

For your peace of mind Uniline operates an ongoing policy of testing on 'as built' roof constructions and has achieved approvals from many manufacturers of roof systems.

system integration

RoofSafe Anchors and Cable systems should only be designed and fitted by companies and personnel authorised and trained to do so.

Uniline operates a training programme for its installation personnel to ensure competence. Installation technicians carry a competence record showing that they have been trained in the correct installation techniques required for our products.

Uniline operates this system for your peace of mind and the safety of the people that will use our products in the future. It is an integral part of our ISO9001:2000 quality system and ensures high standards are maintained.

uniline roof safety systems roofsafe

roofsafe

multisafe

easyclimber

rescue

uniline
safety systems

Because lives depend on it

www.unilinesafety.com

Technical Datasheet No: 0985

uniline safety systems

Bituminous FMA with Aluminium Weather Shroud

Part No URSP055-60

Variable

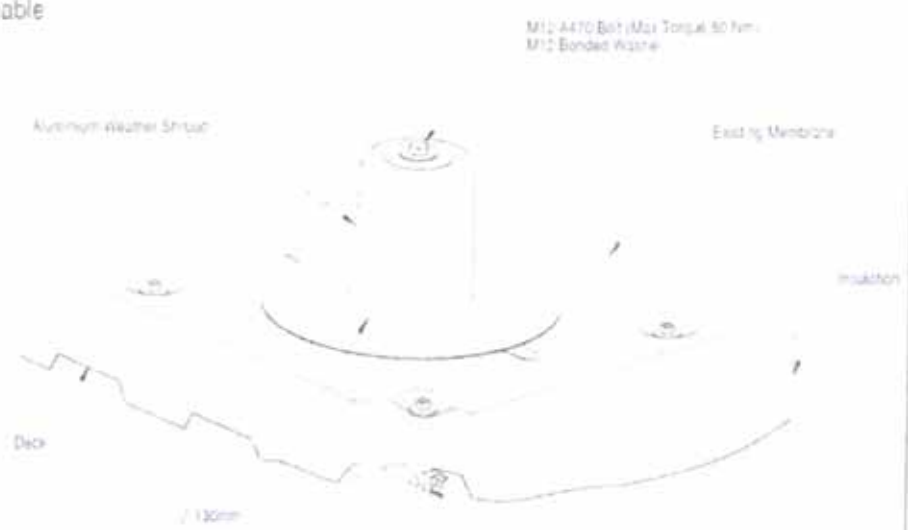

Roof Data

For use with metal decking, plywood or concrete flat roofing systems. (Toggles not used on concrete roof structures)
For metal deck compatibility see Data Sheet Number 0864 in installation instructions. When fixing to concrete, check with chemical resin manufacturer for fixing details. (www.hilti.com)
Plywood decks should be a minimum of 18mm in thickness.
Roof Structures must be able to resist applied uplift loads - see Data Sheet 0948

Component Specification

	Baseplate	Can	Shroud	Other Components
Material	Mild Steel	Mild Steel	Aluminium	316 S Steel
Finish	Sheradized	Sheradized	Satin	Self Colour
Quality	100% Visual Insp			
Strength	Minimum 20kN			
Approvals	EN 795 class A2 & C (not for use as an end anchor)			

Technical Datasheet No: 0986

uniline safety systems

Bituminous FMA with Aluminium Weather Shroud

Part No URSP053-60

Top View (Corner Anchor)

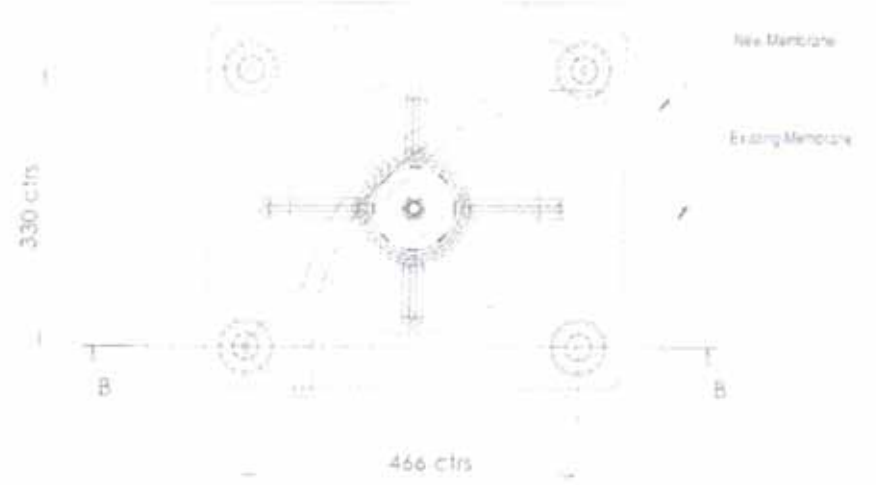

Side View (End Anchor)

Section B-B

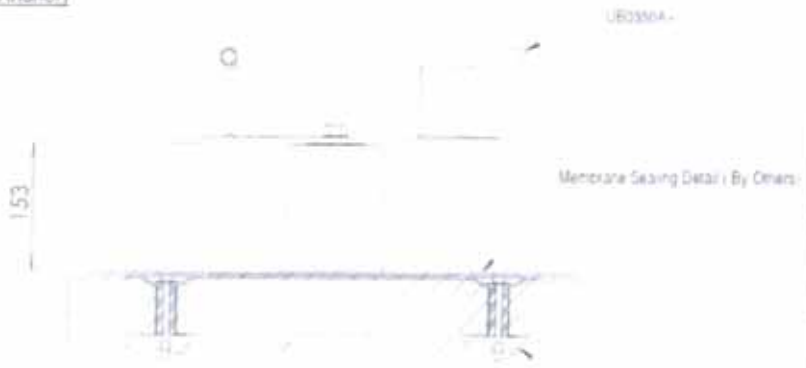

Key - Component not supplied - please order separately

Additional Information The following parts can be fitted to URSP053-60 for use on a Corner Anchor

System	Part Number
Uni-16	UB0345A, UB0350A
Uni-8	UB0405, UB0406, UB0407, UB0411

Technical Datasheet No: 0994

unilline safety systems

FMA Fitting Detail - Toggle Clamp

Part No UF08152 - 4200
UF08152 - 4300

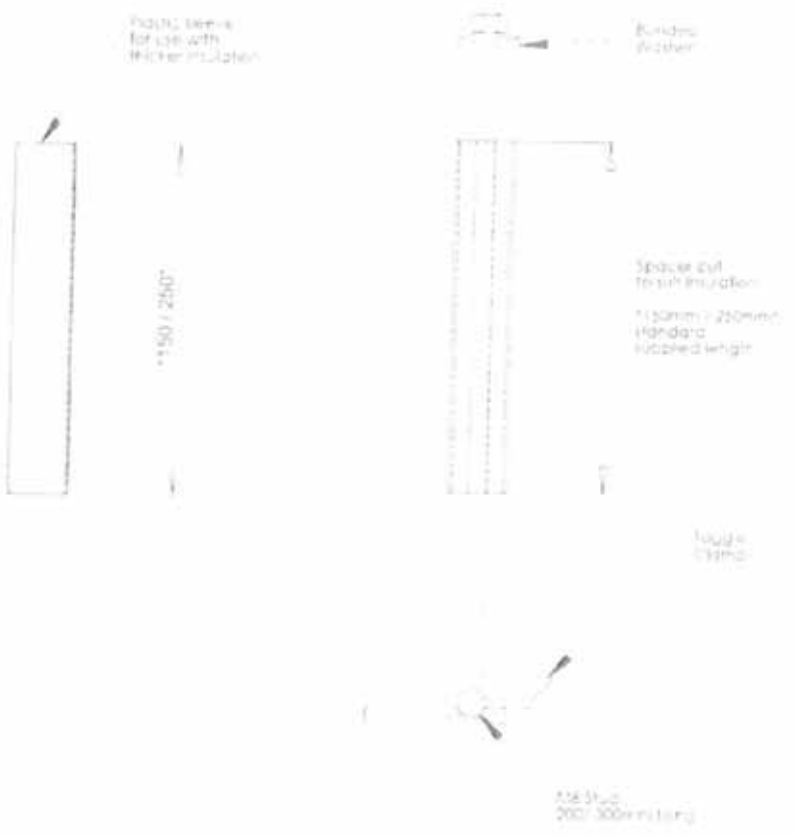

* Note Use UF08152 - 4300 for 250mm depth insulation
Use UF08152 - 4200 for 150mm depth insulation

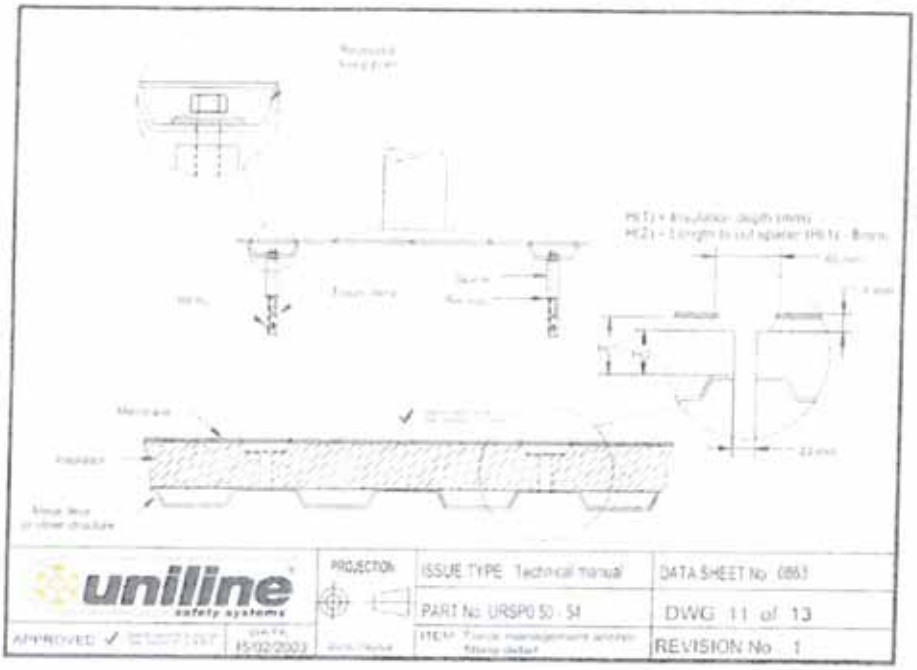
uniline
safety systems
PROJECTION
ISSUE TYPE Technical manual
DATA SHEET No 0863
PART No URSP0 50 - 54
DWG 11 of 13
APPROVED
DATE
15/02/2003
REVISION No 1

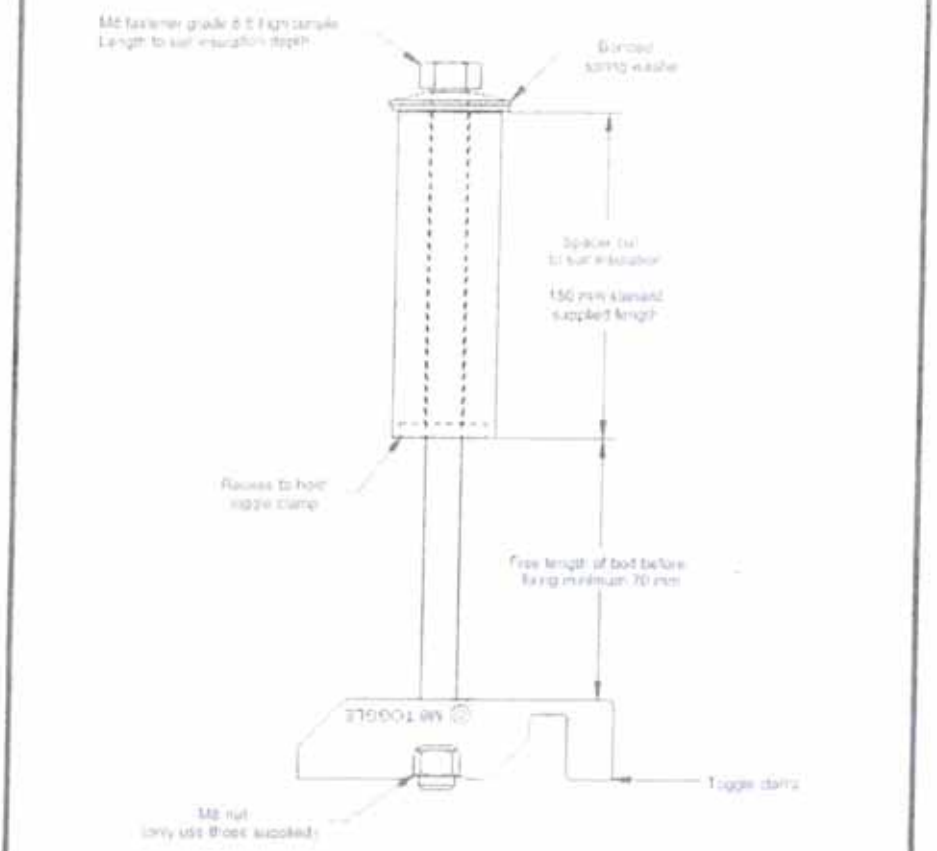

uniline safety systems	ISSUE TYPE Technical manual		PROJECTION
	DATA SHEET No 0863		
ITEM Force management anchor fitting detail - toggle clamp	REVISION No 1	Sheet 12 of 13	DO NOT SCALE
PART No URSP0 50 - 54	APPROVED ✓		DATE : 15/02/2003

roofsafe
cable systems

RoofSafe Cable
Fall Protection System

uniline
safety systems

roofsafe
cable systems

RoofSafe Cable Fall Protection System

working safely at heights	02
product overview	03
features and benefits	04
components	05
typical detail	06

for more information about our range of equipment visit our website at

working safely at heights

Current workplace legislation requires that any person working at height should be properly protected against the risk of falling. This is especially important for people required to work on roofs for maintenance, inspection and construction tasks, as they can be exposed to significant risks. Changes in weather, fragile roof elements, slips and trips, wind and steep inclines can all add to the dangers, so providing a safe system of work for anyone required to access a roof is essential and ensures compliance with regulations and the safety of employees and contractors.

Roofs are also used to provide access for other regular building maintenance and inspection tasks, such as rope access work or access to cradles and suspended gantries, where the need for a secure and sometimes comprehensive anchorage system is essential.

With all of these considerations in mind, Uniline developed the Roofsafe Cable system to complement its range of Roofsafe Anchors that incorporate Force Management Technology. The aim was simple: To enable all those that manage the hazards of work at height the ability to provide comprehensive fall protection to roof workers for a reasonable price and reduce the desire to provide single anchors, which provide discontinuous protection and increase risks for users.

Roofsafe cable is the perfect complement to any building and mitigates many of the risks associated with roof work.

product overview

The RoofSafe Cable System has been designed to complement the RoofSafe Anchor product range, taking advantage of the low system loads generated in the event of a fall. This has enabled Uniline to value engineer its 8mm (5/16") cable system and deliver the same high standard of quality and functionality that is found in all of our products, but for a much more competitive price. This makes comprehensive roof top safety very affordable and allows companies to more effectively mitigate workplace risk.

The Roofsafe Cable Systems can span up to 12m (40ft) between anchors and provides continuous hands free access for the user of the system. The system can be used by multiple workers, providing system calculations carried out using our Uniline for Windows software concur.

Roofsafe Cable System components include end anchors, intermediate cable supports, variable cable supports and corner cable supports to allow maximum flexibility in system designs and ensure workers have uncompromised access for all aspects of roof inspection and maintenance. Components, including the 8mm (5/16") wire rope are made from quality 316 stainless steel. All fabricated parts are further enhanced by electro polishing to provide strong resistance to corrosion and a long service life.

features and benefits

- high quality 316 stainless steel cable fall protection system offering excellent freedom of movement
- navigates corners and building contours
- spans of up to 12m (40ft) between intermediate supports, minimising roof penetrations
- electro-polished components provide long-term corrosion resistance**
- a discreet and unobtrusive solution complements building designs
- system performance calculated using bespoke design software providing assured levels of safety
- the system maintains a minimum safety factor of 2 for multiple users
- conforms to EN795 Class C, OSHA 1915.159, 1926.502M, ANSI Z359.1 2007 and AS/NZS 1891.2
- CE Marked

**Some aggressive environments can cause corrosion and discoloration of stainless steel

robust, functional,

Unieye end anchorage connector

316 stainless steel, electro-polished, serial numbered

0.8kN (180lbs) Tensioner

316 Stainless Steel

8mm (5/16") intermediate guide

Electro-polished 316 Stainless Steel

90 and 45 degree corners, 316 stainless steel, electro-polished

Other angles achieved using variable bracket (212-116-302)

Variable guide

316 stainless steel electro-polished

7x7 (5/16") 316 Stainless Steel wire, breaking Strain 38.7kN (8700lbs)

Swage toggle

316 stainless steel

Unigrab Attachment Device weighs only [illegible] and fits in the palm of your hand

Can be attached at any point along the system and enables freedom of movement along the system as it by passes all the components

316 stainless steel, electro-polished and serial numbered for traceability

typical detail

A
B
C
D
E
F
G
H

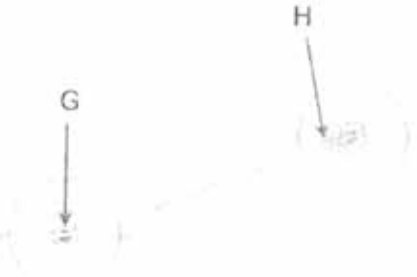

roofsafe

multisafe

easyclimber

rescue

uniline
safety systems

www.unilinesafety.com

E6 Semi-automation of existing internal doors LBHPA2A9

Spence's double corridor door sets are generally comprised of two equal leaf, pivot hinged, double swing doors each with a nominal width of 700-750mm. These are hard or impossible for a wheelchair user, or say a mother with buggy or a porter with a trolley, to pass. The University has initiated a programme of semi-automation of these doors. The cost of the specialist door closers needed to assist disabled users (both wheelchair users and other people with strength or mobility impairments) is such that it is more cost-effective to replace the doors with an unequal leaf arrangement, and semi-automate only the wide leaf.

E6.1 Applies to the University Listed Buildings

E6.2 Drawing 678/01 included here for ease of reference.

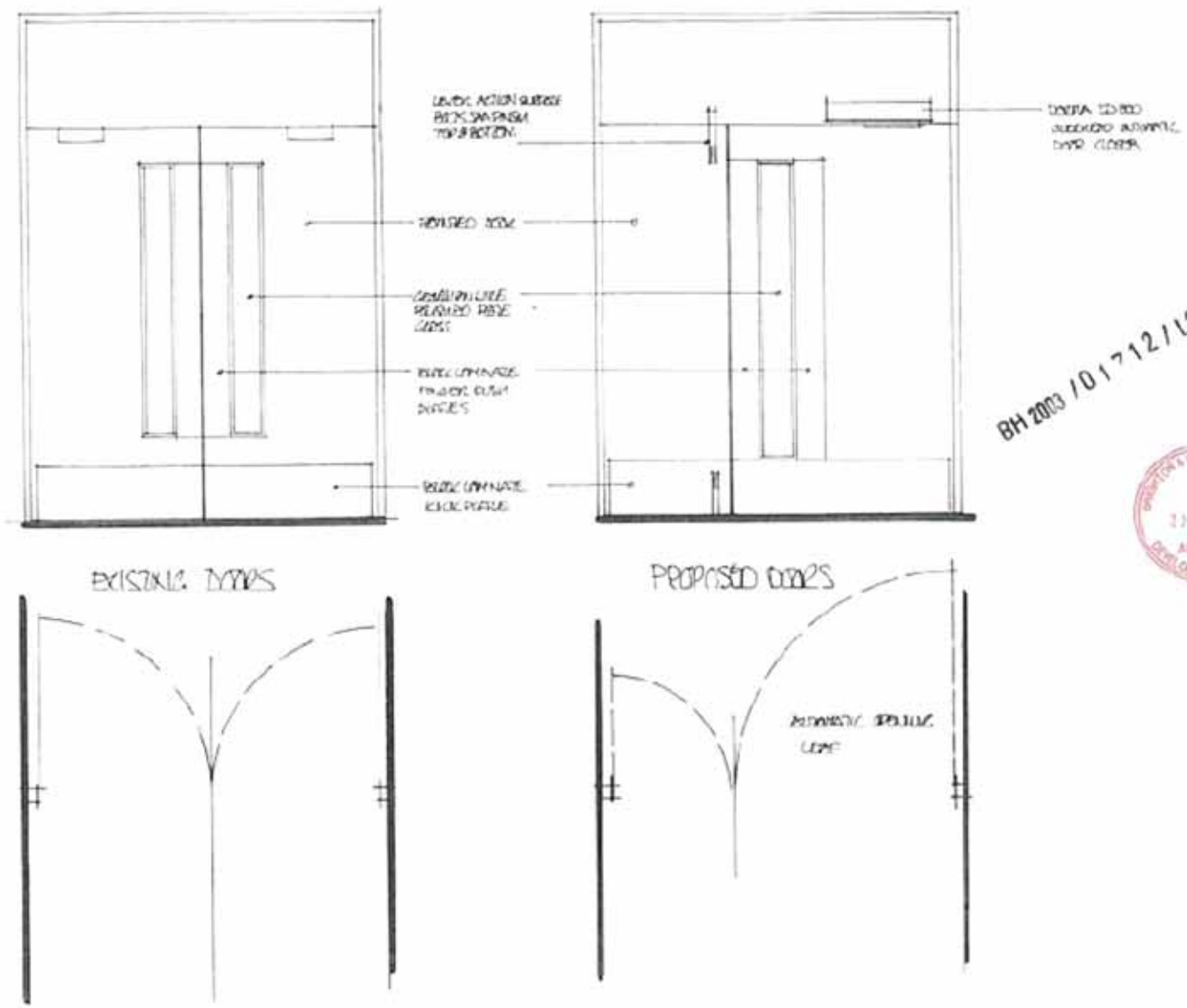

BH 2003 / 01712 / LB

BRIGHTON & HOVE CITY COUNCIL
22 JUL 2003
APPROVED
DEVELOPMENT CONTROL

Barry Field
ARCHITECT
DESIGNA
7 Queen Square
Brighton BN1 3FD
Tel 01273 [illegible]
Fax 01273 [illegible]

UNIVERSITY of SUSSEX
DOORS.

Annex F Certificates of Lawful Proposed Works (CLPWs) or Type 2B Works[1]

F1 Flat roofing, subject to perimeter detailing CLPW2B1

F1.1 Applies to Arts A and B, the Chichester 1 Building, the Attenborough Centre, the Library, the Pevensey 1 Building and the Shawcross Building.

F1.2 One of Spence's repeating motifs in University buildings is flat roofs of either asphalt or built-up traditional roofing felt, generally protected by a layer of chippings. In time, both of these systems become embrittled with the loss of oils in the bitumen based materials. The following method will be adopted for replacement flat roofing across the above buildings:

- Strip off chippings and apply Decathane or agreed similar product
- Built up elastomeric felt system, introducing an insulation layer to improve thermal performance.

NB: Building up a flat roof with insulation is acceptable unless the roof would project above the parapet (as for instance on ACCA where some of the parapets are too low to hide the non-standard detail). Roof safeguarding is covered under LBHPA2A8.

F2 Works to brickwork: fixings CLPW2B2

F2.1 Applies to the University Listed Buildings

- Where fixings are to be made into face brickwork, whether internal or external, these should be made in the manner that is the least destructive and most reversible. Generally this means that fixings should wherever possible be made into the mortar courses (and perpends) of the brickwork rather than into the bricks themselves.
- Where fixing into the mortar is not practicable for whatever reason, e.g. where pre-drilled bracket fixings are at centres different from the spacing of mortar courses or where the diameter of a fixing necessary is greater than the thickness of the mortar courses, due consideration should be given to locate fixings to minimise damage to bricks.
- On removal of redundant fixings consideration should be given to:
  - Removal of plugs;
  - Making good to fixing holes with mortar to match the existing if in mortar joints;

[1] Included here for information and to aid effective management of the listed buildings. Formal CLPW to be applied for in due course.

- Repair to bricks, where possible, with mortar coloured or tinted to match the brick colour;

- Replacement of bricks with as close a match to the original as possible. Those most recently approved at ACCA (1381046) were Hanson Autumn Glow' and 'Hanson Oakthorpe Red Multi Stock', hand selecting from each type to best match variations in colour.

F3 Works to brickwork: re-pointing CLPW2B3

F3.1 Applies to the University Listed Buildings

- Mortar will be analysed as follows: Allow to remove and post a typical sample of the existing mortar for analysis to assess the existing lime content including particle size and distribution of sand. Sand will be sourced from quarry of their suggestion: Cliveden Conservation, The Tennis Courts, Cliveden Estate, Taplow, near Maidenhead, Berkshire SL6 0JA.

- Brickwork to be raked out with an Arbortech AS Mortar Saw (or similar approved plant) to a depth of 25-30 mm, all loose and poorly adhered material removed, all brickwork to be dampened down to prevent suction and re-pointed according to the mortar analysis. Finished mortar joint to match original, struck plumb 2mm-3mm from brick face.

F4 Semi-reflective film on windows (solar control film) CLWP2B4

F4.1 Applies to Arts A and B, the Chichester 1 Building, the Attenborough, the Library, the Pevensey 1 Building and the Shawcross Building.

F4.2 Solar control film may be considered as an alternative to or, in some instances, additional to the installation of blinds to minimise solar heat gain or glare. The use of highly reflective film, giving a mirrored appearance externally, will not be permitted. The use of any other material must only be after approval by the University and the local Planning Authority of a sample installation.

F4.3 Various semi-reflective grey films have been used successfully and, even immediately next to untreated panes, can be very difficult to detect. Such films are deemed acceptable and include:

- Spectrum, ref. STM65CH
- Sunguard, ref. RLW 150 DN33 PSSR

F5 Cabling over brickwork (internal) CLWP2B5

F5.1 Applies to the University Listed Buildings

F5.2 Concealed cabling, for instance that in existing ducts and voids in the buildings' construction, would not affect special interest. Where concealment of cables is not possible then the following should apply:

- Electrical (power and lighting) cabling should be run in copper sheathed cable where it is exposed.
  Reason: Bare copper oxidises to a dull brown colour, almost identical to that of face brickwork. Unlike plastic sheathing copper can be decorated where appropriate, e.g. next to existing decorated surfaces.

Careful consideration should be given to the location of junction boxes.

- If no concealed route is possible, the route with the least visual impact or intrusion should be used. Examples include:
  - On the reverse (non-public) side of a wall, e.g. in a series of adjacent offices rather than along a corridor;
  - At wall/wall or wall/ceiling abutment;
  - Next to a door frame or in a window reveal.

- Data cable is not currently available with copper sheathing. Where it is necessary to run exposed data cabling, it should be as neatly contained as possible. This may as a last resort include the use of plastic trunking, which should be run as inconspicuously as possible.
- The use of exposed plastic conduit should be minimised and used only as a last resort if there is no practicable alternative.
- Data cabling in Falmer House, where necessarily exposed, should be concealed in black split compartment trunking, sympathetic with original heating rails (themselves used for cable routes).
- Consideration should be given to suitable decoration of any exposed cabling, to minimise its visual impact or intrusion.

F6 Data cabling in Arts A CLPW2B6

F6.1 Applies to Arts A and B

F6.2 Within this building a different approach to cabling has been agreed to provide high level trays running through corridors.

F7 Library re-partitioning - high-level transoms CLPW2B7

F7.1 Applies to the Library

F7.2 One of Spence's repeating motifs in University buildings is the vaulted ceilings. In the Library this ceiling form is supplemented and accentuated by the use of feature rails at the head of dividing partitions, just below the spring line of the vaults. In apparent conflict with this is Spence's stated intention, in the use of loadbearing structural frames and non-loadbearing partitioning, to maintain flexible use of space.

F7.3 As an element of successive refurbishments of the Library, designers have achieved a compromise solution maintaining the flexibility yet retaining Spence's original design:

- Where partitions are removed, they should be removed only up to the feature head rail which should be retained.
- Details of BHCC Listed Building Consent applications Refs. BH1997/01861/LB and BH2009/01902 should be replicated, or the University to submit further details with any future application for a Certificate of Lawfulness.

F8 Nosings on steps and staircases CWLP2B8

F8.1 Applies to the Pevensey 1 Building and the Shawcross Building

F8.2 Details for contrasting nosings shall be:

- External - width: 1½" (37mm), on the tread but not the riser, as close to the front edge of the treads as possible.
- Internal – aluminium extruded profile (such as Gradus) with non-slip insert.

F9 Signage: External, street lettering CLPW2B9

F9.1 The University's external wayfinding signage has been deliberately conceived to complement Spence's rectilinear and vaulted building forms. The signage 'family' is grouped into the following types: Variable message; Vehicular directional; Information points, major and minor; Fingerposts; Building signs, freestanding and wall mounted.

F9.2 Details for signage shall follow the types as set out in 'Wayfinding Signage, University of Sussex' produced by fw.design in 2009 and consented by BHCC reference BH/2009/01659 included here for ease of reference.

NOTE

sign family overview

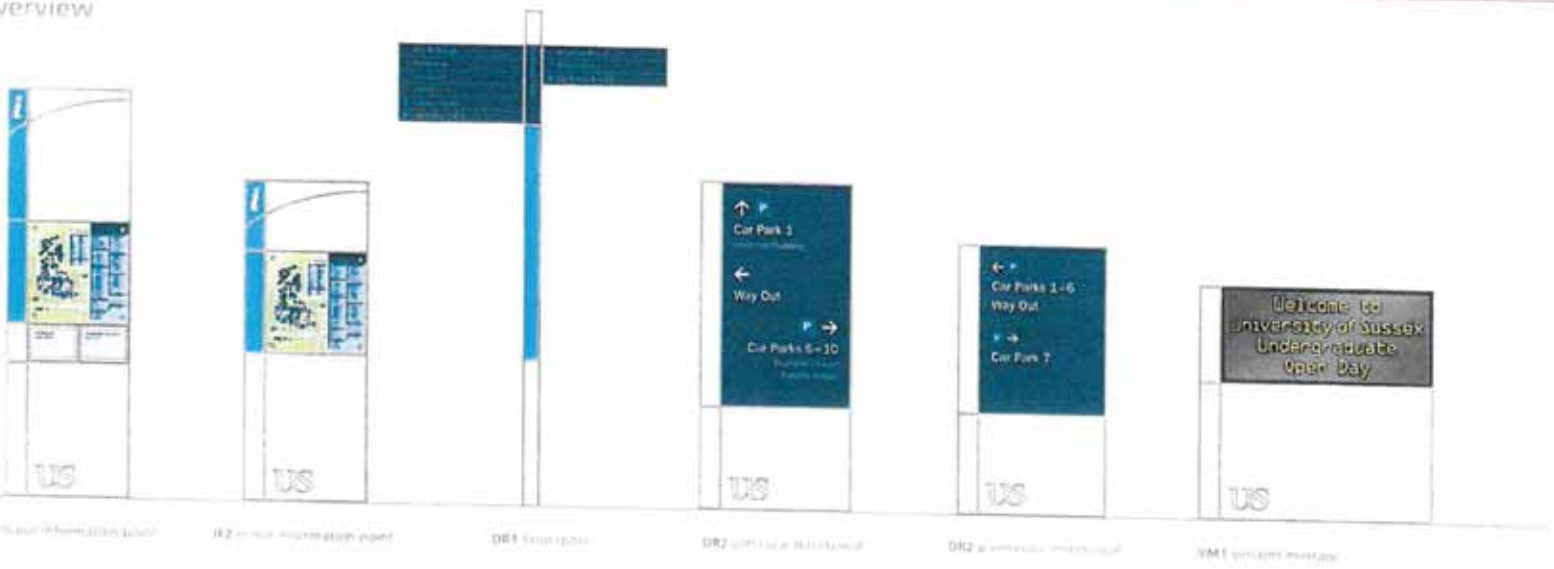

DR2. vehicle directional

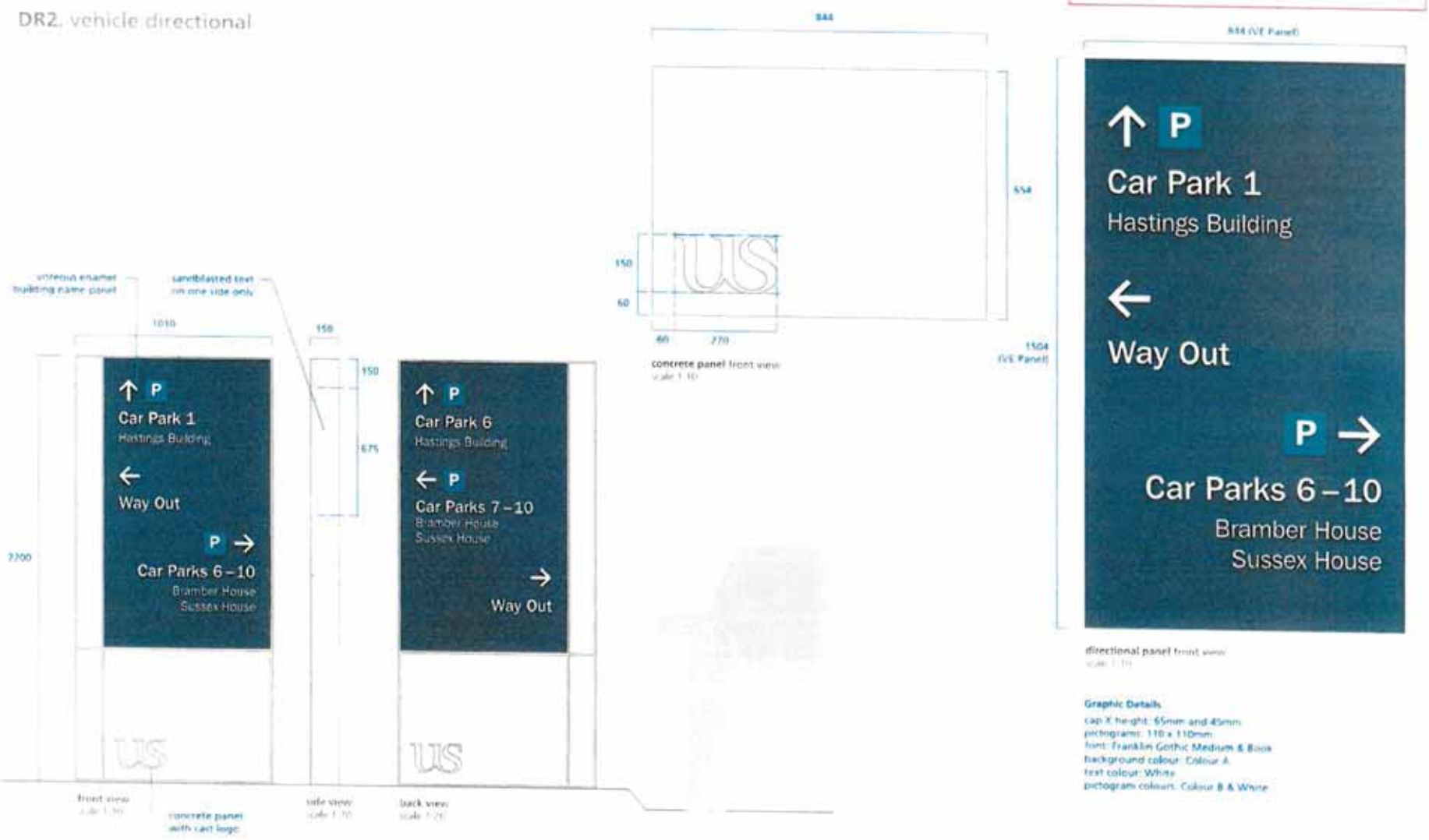

DR2 a. vehicle directional

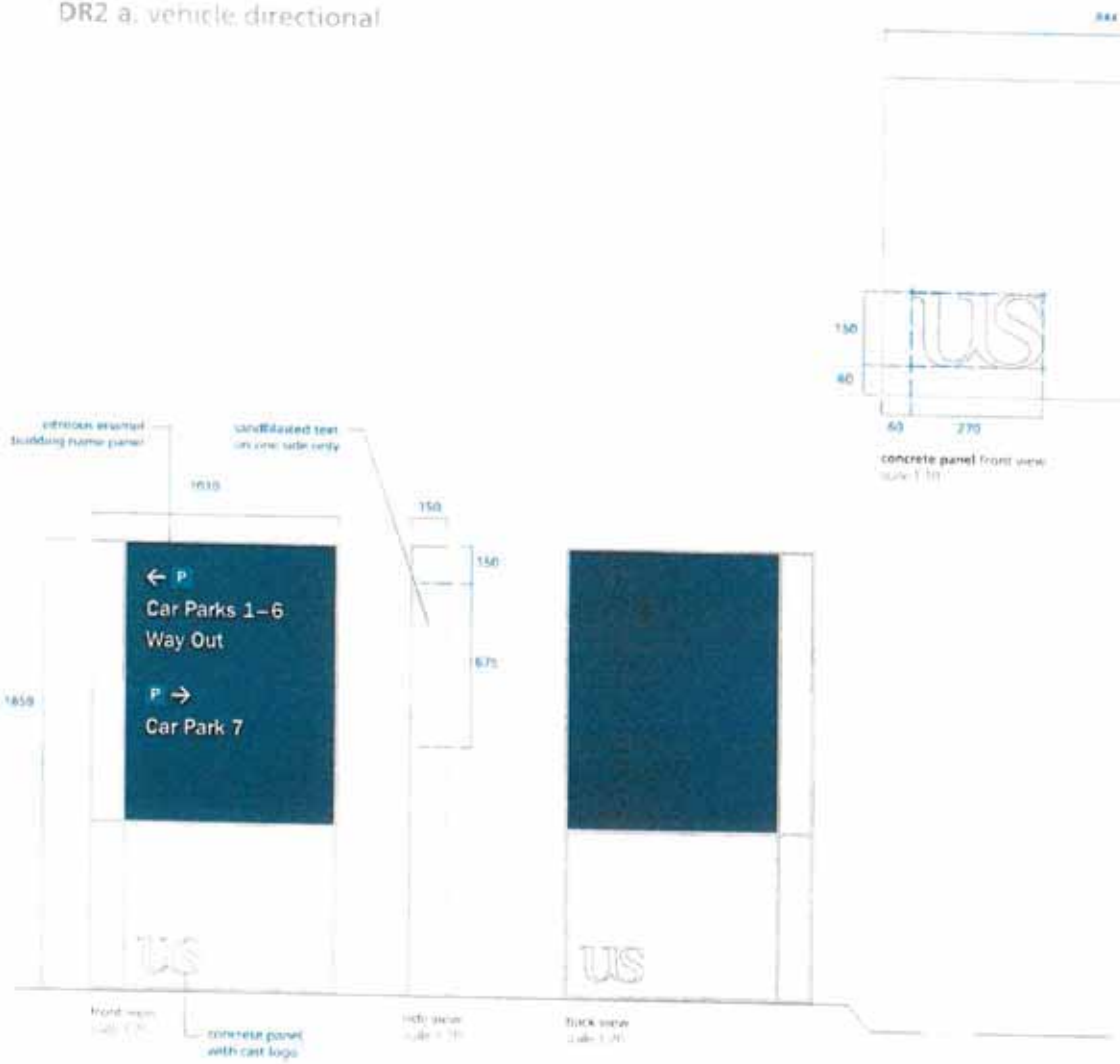

NOTE

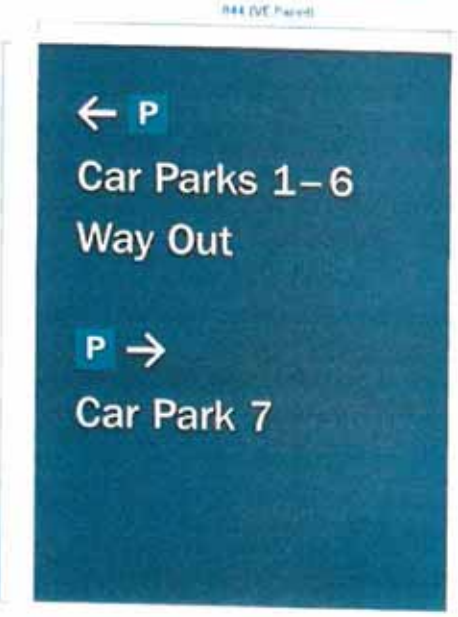

directional panel front view

Graphic Details

cap X height: 65mm and 45mm
pictograms: 110 x 110mm
font: Franklin Gothic Medium & Book
background colour: Colour A
text colour: White
pictogram colours: Colour B & White

F10 Signage: Internal CLPW2B10

F10.1 Applies to the University Listed Buildings

F10.2 All internal signs to facing brickwork to be affixed into mortar joints only.

Annex G Further Guidance on where Listed Building Consent will be required (Type 3 Works)

Works for which listed building consent will usually be required

G.1 Against the background of this LBHPA, the inspection of the buildings suggests that works to the following buildings will always require reference to the local planning authority and that it can be anticipated that in the vast majority of cases listed building consent will be considered necessary, unless the parties decide that the works can be covered by LBHPA consent under the Agreement or by a certificate of lawful proposed works:

- Falmer House (Grade 1)
- The Meeting House (Grade II*)

G.2 Throughout the rest of the buildings works affecting exteriors should also be referred to the local planning authority, for consideration of whether listed building consent is necessary unless the parties decide that the works can be covered by an LBHPA consent under the Agreement (section 3) or by a Certificate of Lawful Proposed Works (section 4). In reaching this conclusion, the local planning authority in discussion with the other parties can then consider whether these works are suitable for inclusion in the LBHPA, or be dealt with by way of a listed building consent application.

G.3 Additionally, all internal works affecting:

- staircases;
- floors - wood block, quarry tile and brick;
- walls - exposed red brick and board-marked concrete;
- fittings - all original fixtures and fittings, where attached to the building; and
- ceilings - all those with segmental arches;

will also require listed building consent and again, in reaching this conclusion, the local planning authority in discussion with the other parties can then consider whether these works would be suitable for inclusion in the LBHPA or dealt with by way of a listed building consent application.

G4 Works for which listed building consent will not usually be required

G4.1 For the areas of the following buildings as specified below, however, it is the view of English Heritage and Brighton and Hove City Council that works are unlikely to affect the significance of the building because those works do not affect the character of the building concerned as one listed as having special architectural or historic

interest, provided that they do not have any effect on the exterior or the structural stability of the buildings.

G4.2 Attenborough Centre for the Creative Arts (ACCA), previously the Gardner Arts (Grade II*) LE No. 1381046:

- Understage area.

G4.3 The Library (Grade II*) LE No.1381047:

- The removal and insertion of partitions behind a line drawn on the east face of the west staircase tower on the first and second floors, thus allowing an open gallery area on all sides of the interior light wells. On the ground floor the line is drawn a little further west, at the rear of the west staircase tower (see accompanying plans in Annex C). Any easterly partitions of these areas, that is fronting onto the light wells, would require listed building consent, but not behind.

- Alterations to the basement not affecting the exterior of the building.

G4.4 Arts A (Grade II*) LE No. 138045:

- Alterations to offices on all floors which do not affect built-in shelving units.
- Removal of no more than four adjacent partitions.

G4.5 Arts B (Grade II*) LE No. 138045:

- Alterations to offices on all floors.
- Removal of no more than four adjacent partitions.

G4.6 Shawcross, previously Engineering I (or ENGG I), or Engineering and Applied Science I (EAPS I) (Grade II*) LE No. 1381043:

- Alterations to the offices on the first and second floor.
- Removal of no more than four adjacent partitions.

G4.7 Chichester I, previously Molecular Sciences I (or MOLS I), or Chemistry I (Grade II*) LE No. 1381044:

- Alterations to offices on first and second floors.
- Removal of no more than four adjacent partitions.

G4.8 Pevensey I, previously Mathematical and Physical Sciences I (or MAPS I), or Physics I, and Pevensey II, previously Mathematical and Physical Sciences II (or MAPS II), or Physics II (only the east/west wing of the latter is listed, not the north/south wing parallel to the road) (Grade II*) LE No. 1381049:

- Alterations to offices on first and second floors.
- Workshops in north-west quarter.
- Removal of no more than four adjacent partitions.

G5 Although the cumulative effect of minor alterations is recognised and accepted, major alterations to the layout of offices involving sub-division or incorporation together of more than five offices should be referred to Brighton and Hove City Council and English Heritage. Proposals which would lead to the removal of partitions in any listed building in such a way as to render that building able to be seen through from one side to the other should likewise be referred to Brighton and Hove City Council and English Heritage.

G6 Works for which local planning authority guidance should be sought

G6.1 For the avoidance of doubt, this suggests that all proposals that would affect all the areas in the buildings specified below should be referred to the local planning authority to consider whether individual listed building consent or the development of a new LBHPA or CLP Works consent would be necessary.

- ACCA - all interiors apart from the understage area.
- The Library - all of the ground, first and second floors in front of lines drawn as described above and on the accompanying plans in Annex C.
- Arts A and B - all lecture theatres and seminar rooms, staircases and circulation areas.
- Shawcross - both lecture theatres, the seminar rooms, workshop and gallery, rest area, staircase and other circulation areas.
- Chichester 1 - lecture theatre, laboratories and seminar rooms, staircases and circulation areas.
- Pevensey I - lecture theatre, laboratories and seminar rooms, staircases and circulation areas.

G7 Pre-Application Discussions

G7.1 In cases where Listed Building Consent is required, or where there is any doubt as to whether it is required, the local planning authority would encourage the submission

of proposals for pre-application discussions. Such a submission should be made at the earliest possible stage of project planning so as to allow the comments of the local planning authority, and English Heritage, to be fully taken into account. The pre-application submission should contain sufficient information, in the form of drawings, photographs and supporting information, to enable to local planning authority (and English Heritage) to properly assess the proposals (such information should ordinarily include reference to the HPA and the Conservation Plan, the relevant list entry and any relevant Spence design drawing). Such timely and well researched pre-application submissions will enable the formal applications to be determined promptly.

Annex H Future Projects

H.1 Future Projects

The Partners have identified several projects, listed here, which they agree are crucial to the fulfilment of the strategic aims outlined above; these are acknowledged by the partners to be desirable in principle. Other projects may be identified during the preparation of the HPA or during the 10 year term of the Agreement. The projects have been categorised as low, medium and high according to their impact on the historic core of the University:

- Tables and bench sets
- Removal/replacement of Spence laboratory furniture
- Introduction of Fibre Optic cabling across listed buildings
- Repaving in Falmer Courtyard

ANNEX I Statement of Reasons

The Planning (Listed Buildings and Conservation Areas) (Heritage Partnership Agreements) Regulations 2014 requires that a Statement of Reasons is provided with any new LBHPA. This Statement of Reasons intends to meet the requirements of Regulation 3 and includes: An assessment of likely effect of proposed works; The justification for the proposed works and; Details of relevant conditions which are included in Section 3 of this LBHPA.

Assessment of the likely effects of the proposed works (Type 2A works)

The listed buildings at the University of Sussex designed by Sir Basil Spence have many design features in common and it is considered important that these features should be safeguarded as a major contributor to the significance of the buildings, including their group value. These common features include the use of flat roofs; the use of a good quality red brick set in a slightly cementitious mortar of a yellowy buff colour; the use of board-marked concrete; segmental arches, particularly in concrete, both externally and internally; the use of exposed brickwork internally; and purpose-designed internal fixtures and fittings, such as found in laboratories in science buildings, in lecture theatres and in the library.

The Consented Works that are the subject of Section 3 of this LBHPA are generic and repetitive works that apply similarly to a number of the listed buildings at the University and are works for which Listed Building Consents have previously been granted by the Council and satisfactorily implemented for specific listed buildings. They include works to repair or replace external historic fabric; works to original internal fixtures and finishes to enable the University to meet modern teaching expectations; and works deemed to be required for safety and/or accessibility reasons. They are works that would affect the special architectural or historic interest of the buildings and which could potentially cause clear harm to the special interest of the buildings, including the loss of important features.

Justification for the proposed works (Type 2A works)

In the absence of this LBHPA the University would need to apply for Listed Building Consent for each building and may need to make several applications for each building, to address issues as and when they arise in each case. This LBHPA enables the University to plan strategically for the carrying out of Type 2A works thus avoiding the need for repeated applications of an individually minor nature, thereby saving time and resources for all parties.

The LBHPA would ensure that the Consented Works are carried out in an appropriate manner or design and/or using appropriate details and materials so that the special interest of the buildings is conserved in accordance with the requirements of the National Planning Policy Framework (NPPF) Section 12 and Brighton and Hove City Council's Local Plan Policies. They would further ensure that generic or repetitive works are carried out in a

consistent manner across all of the listed buildings referred to for each of the Consented Works, thereby conserving the group value of the buildings.

Details of Conditions for the proposed works (Type 2A works)

In order to meet the objectives outlined above, each of the Type 2A works is subject to particular conditions; these are set out in Section 3 of this LBHPA.